chanhvinh.com



# **Clamps** • DIN 6316 with goose-neck
## EH 23160.



## Product Description

This clamp (clamping claw) according to DIN 6316 with goose-neck is mainly used in mechanical clamping technology for clamping workpieces.

### Material

- Heat-treated steel, varnished

## Drawing

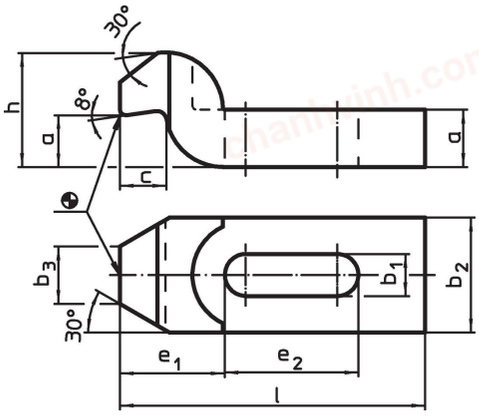


## Order information

| Nominal dimension $b_1$ [mm] | Dimensions [mm] | | | | | | | | For screws [mm] | For screws [in] | | Art. No. |
|---|---|---|---|---|---|---|---|---|---|---|---|---|
| | l | a | $b_2$ | $b_3$ | c | $e_1$ | $e_2$ | h | | | | |
| **6.6** | **60** | 10 | 20 | 10 | 8 | 20 | 20 | 20 | M 6 | 1/4 | 81.0 g | 23160.0007 |
| **9.0** | **80** | 12 | 25 | 12 | 9 | 25 | 25 | 24 | M 8 | 5/16 | 165.0 g | 23160.0009 |
| **11.0** | **100** | 15 | 30 | 15 | 12 | 32 | 32 | 30 | M10 | 3/8 | 307.0 g | 23160.0011 |
| **14.0** | **125** | 20 | 40 | 20 | 16 | 40 | 40 | 40 | M12, M14 | 1/2 | 680.0 g | 23160.0014 |
| **18.0** | **125** | 25 | 50 | 25 | 20 | 49 | 40 | 50 | M16, M18 | 5/8 | 1.1 kg | 23160.0018[1)] |
| **18.0** | **160** | 25 | 50 | 25 | 20 | 49 | 50 | 50 | M16, M18 | 5/8 | 1.4 kg | 23160.0019 |
| **22.0** | **160** | 30 | 60 | 30 | 24 | 55 | 55 | 60 | M20 | 3/4 | 1.9 kg | 23160.0022[1)] |
| **22.0** | **200** | 30 | 60 | 30 | 24 | 55 | 70 | 60 | M20 | 3/4 | 2.4 kg | 23160.0023 |
| **26.0** | **200** | 35 | 70 | 35 | 28 | 72 | 60 | 70 | M24 | 1 | 3.4 kg | 23160.0026[1)] |
| **26.0** | **250** | 35 | 70 | 35 | 28 | 72 | 80 | 70 | M24 | 1 | 4.1 kg | 23160.0027 |
| **33.0** | **250** | 40 | 80 | 40 | 40 | 91 | 80 | 80 | M30 | 1 1/4 | 4.5 kg | 23160.0034[1)] |
| **33.0** | **315** | 50 | 80 | 40 | 40 | 91 | 100 | 100 | M30 | 1 1/4 | 8.3 kg | 23160.0035 |

[1)] DIN standards do not include these dimensions.

chanhvinh.com



## Application example

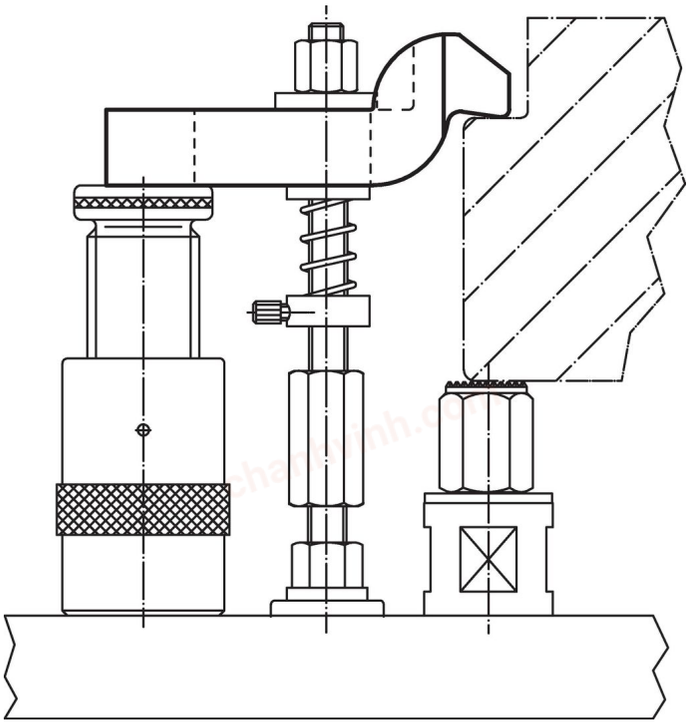

## Compliance

**RoHS-compliant**
Compliant with Directive 2011/65/EU [RoHS].

**Does not contain SVHC substances**
No SVHC substances with more than 0.1% w/w contained - SVHC list [REACH] as of 04.02.2026.

**SCIP-code**
N/A

**Does not contain Proposition 65 substances**
No Proposition 65 substances included.
https://www.P65Warnings.ca.gov/

**Free from Conflict Minerals**
This product does not contain any substances designated as "conflict minerals" such as tantalum, tin, gold or tungsten from the Democratic Republic of Congo or adjacent countries.

**POP-compliant**
Contains no persistent organic pollutants – Stockholm Convention [POP] as of September 2025.

**PFAS-compliant**
Contains no per- and polyfluoroalkyl substances (PFAS).

**TSCA-compliant**
Agent concentration in this product does not exceed the specified threshold.