chanhvinh.com

Quick Clamping Pins

EH 23113.



Product Description

Quick clamping pins are used for the quick positioning, fastening, and clamping of components. They are a particularly good choice for applications involving different material thicknesses or varying clamping ranges.
Offering a combination of positioning and clamping functionality, they allow you to fasten and release components quickly and with perfect repeatability - and with no need for additional tools. This helps reduce set-up times and ensures a high level of process reliability.
Typical areas of application are fixtures, mounting fixtures, and welding tables as well as numerous applications in machine and plant construction and in tool making.
The quick clamping pins are composed of a pin body with three clamping balls and a knurled knob with an internal hexagon.
The locking elements are released / tightened by turning the knurled knob or by actuation with a hex key.
When the pin is locked, the clamping mechanism exerts a set clamping force within the designated clamping range. This makes it possible to securely position and clamp components with different material thicknesses.
After it has been unlocked, the quick clamping pin can be quickly removed or repositioned.
Quick clamping pins are distinguished by the following characteristics:

- Quick positioning, fastening, and clamping of components
- Defined clamping range for compensating different material thicknesses
- Tool-free actuation for short set-up and change times
- Operation by hex key or by hand using the knurled knob
- Clamping and positioning with perfect repeatability
- Suitable for frequent clamping operations and varying applications
- Secure locking and reliable clamping force
- Flat and robust design
- Available with different clamping ranges and dimensions

Material

- Stainless steel 1.4305

Operation

The quick clamping pin is centred and clamped with three balls by tightening / screwing in the clamping screw. The clamping screw can be operated manually by turning the knurled knob or by using a hex key.

More information

Notes

Repeatability depends on the counterpart.
Bore hole - H11: ±0,10 mm
Positioning bushings (EH 23112.) DIN 172 / DIN 179 - F7: ±0,05 mm

Further products

- Positioning Clamping Pins
- Manual Handles, for positioning clamping pins
- Bushings, for positioning clamping pins
- Locating Bushings, for positioning clamping pins, for press fit
- Locating Bushings, for positioning clamping pins, for screw fit
- Positioning Bushings, with collar, DIN 172 A
- Positioning Bushings, without collar, DIN 179 A

Drawing

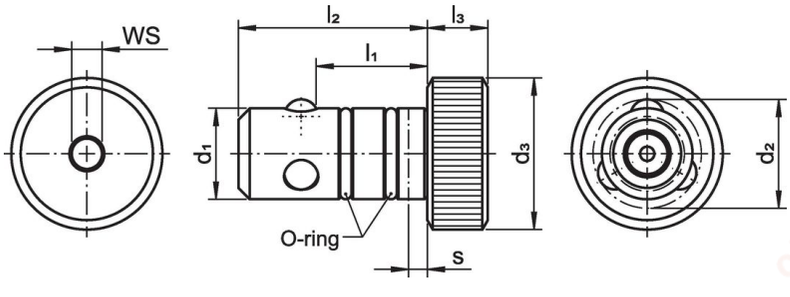

chanhvinh.com

Order information

Dimensions								WS	Tightening torque max.	Holding force max.	Established tightening torque ~[1]	Holding force ~[2]	Shearing resistance single shear min.		Art. No.
d_1 -0.02 -0.06	l_1 min.	l_1 max.	d_2	d_3	l_2	l_3	Stroke s								
[mm]								[mm]	[Nm]	[kN]	[Nm]	[kN]	[kN]	[g]	
Stainless steel															
10	**15**	20	12.00	18	24	8	5	4	3	1.2	0.5	0.25	30	35	23113.0010
10	**20**	25	12.00	18	29	8	5	4	3	1.2	0.5	0.25	30	38	23113.0510
12	**15**	20	14.40	20	25	8	5	4	3	1.2	0.5	0.25	43	39	23113.0012
12	**20**	25	14.40	20	30	8	5	4	3	1.2	0.5	0.25	43	44	23113.0512
16	**20**	25	18.40	24	31	10	5	4	5	1.6	0.8	0.35	78	80	23113.0016
16	**30**	35	18.40	24	41	10	5	4	5	1.6	0.8	0.35	78	97	23113.0516
22	**20**	25	25.75	30	35	12	5	6	6	1.8	1.0	0.60	149	169	23113.0022
22	**30**	35	25.75	30	45	12	5	6	6	1.8	1.0	0.60	149	198	23113.0522

[1] Average hand force established in trials.

[2] Average value (with hand force) established in trials.

Application example



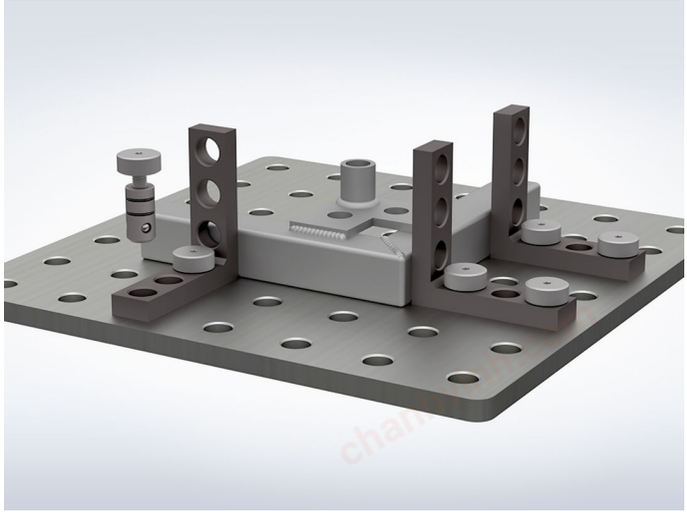

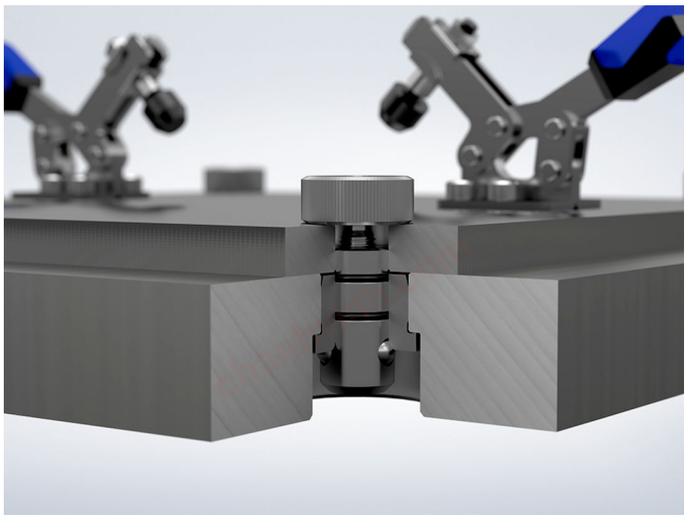

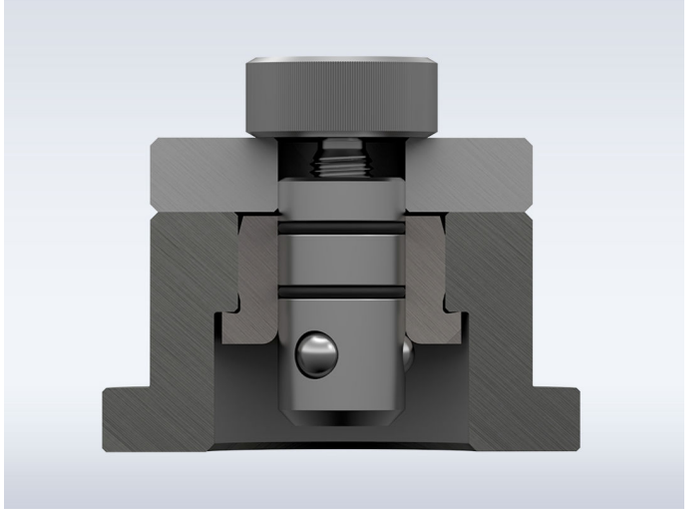

chanhvinh.com

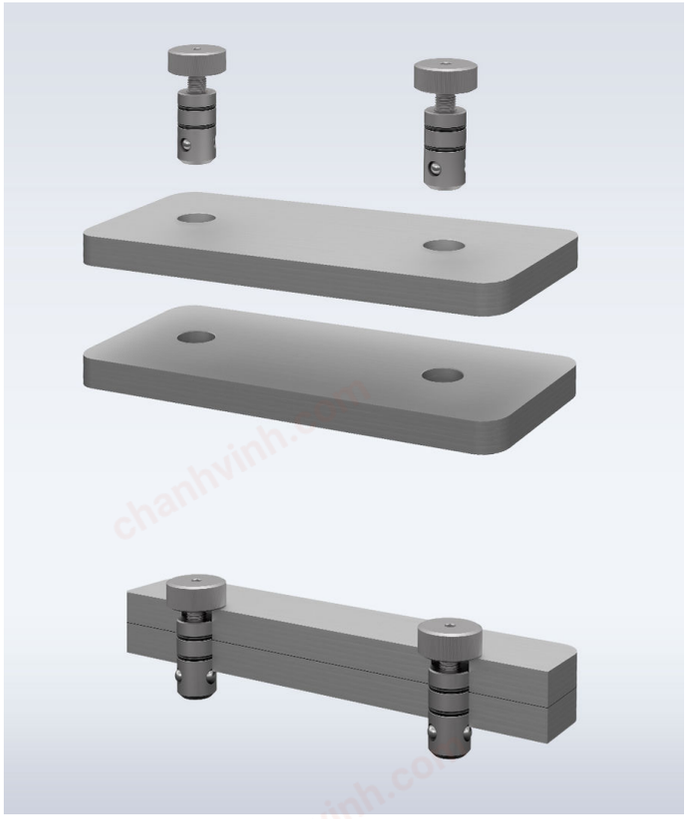

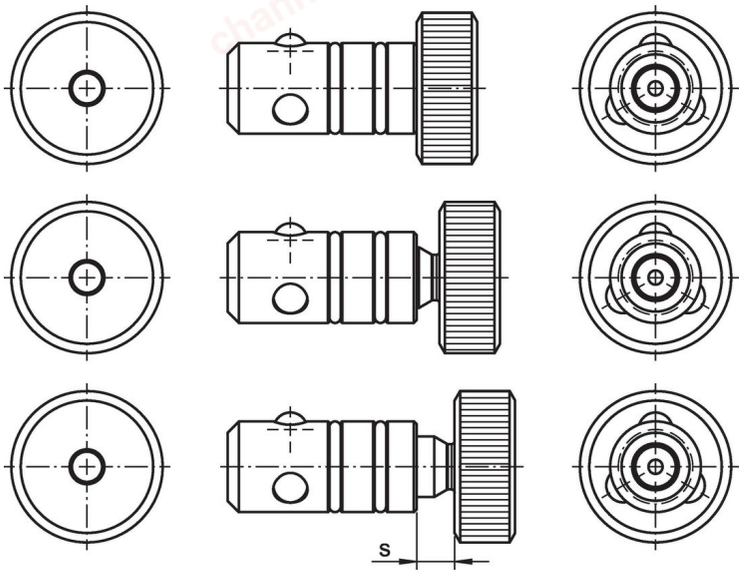

Compliance

For detailed compliance information please select the desired article number.