chanhvinh.com

Manual Handles • for positioning clamping pins

EH 23111.



Product Description

The manual handle enables an easy and fast operation of the positioning clamping pin.

Material

- Stainless steel

Assembly

It is tightened to the positioning clamping pin with the supplied M4 screw.

More information

Further products

- Quick Clamping Pins

Drawing

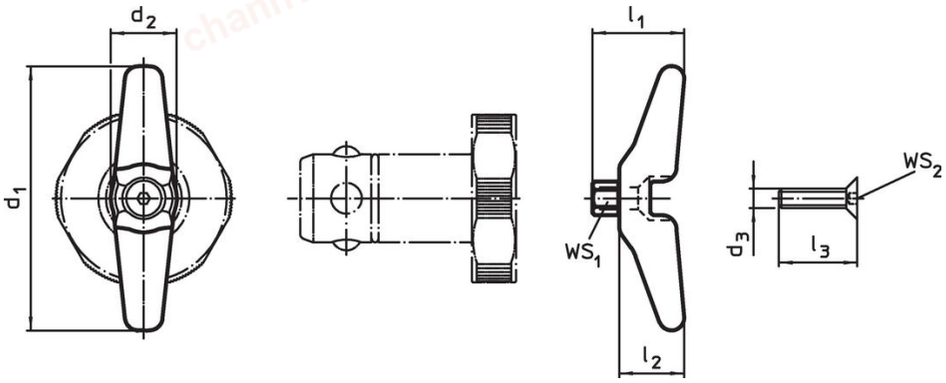

Order information

For pin Ø [mm]	Dimensions [mm]						WS_1 [mm]	WS_2 [mm]	[g]	Art. No.
	d_1	d_2	d_3	l_1	l_2	l_3				
16/20	**60**	15	M4	**20**	15	16	6	2.5	48	23111.0900
25/30	**80**	15	M4	**25**	20	20	10	2.5	75	23111.0902

chanhvinh.com

Application example

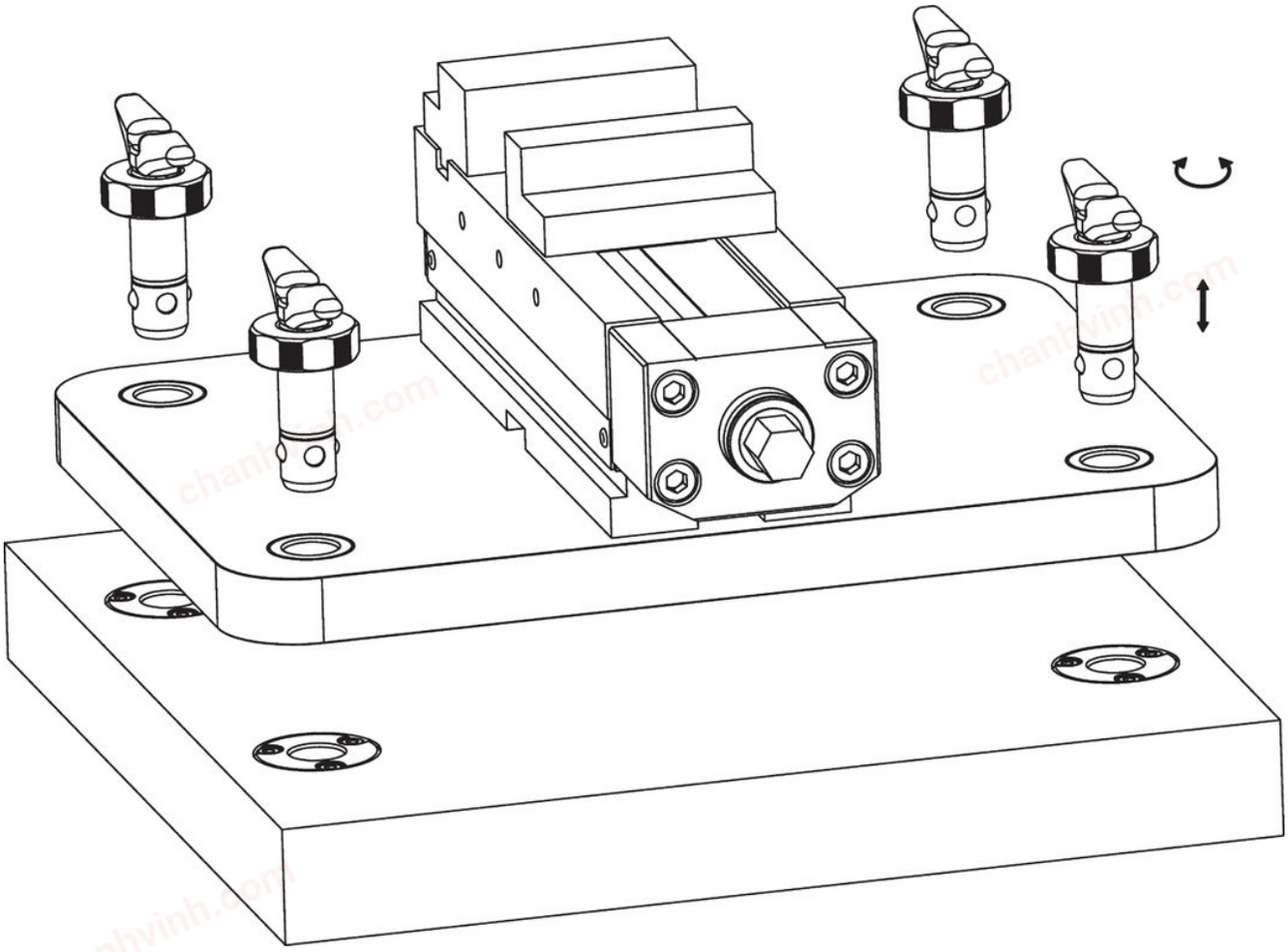

Compliance

RoHS-compliant
Compliant with Directive 2011/65/EU [RoHS].

Does not contain SVHC substances
No SVHC substances with more than 0.1% w/w contained - SVHC list [REACH] as of 04.02.2026.

SCIP-code
N/A

Does not contain Proposition 65 substances
No Proposition 65 substances included.
https://www.P65Warnings.ca.gov/

Free from Conflict Minerals
This product does not contain any substances designated as "conflict minerals" such as tantalum, tin, gold or tungsten from the Democratic Republic of Congo or adjacent countries.

POP-compliant
Contains no persistent organic pollutants – Stockholm Convention [POP] as of September 2025.

PFAS-compliant
Contains no per- and polyfluoroalkyl substances (PFAS).

TSCA-compliant
Agent concentration in this product does not exceed the specified threshold.