chanhvinh.com

Fixed Slot Tenons

EH 23110.

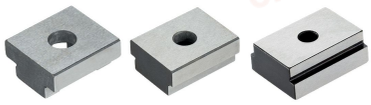

Product Description

To be used for locating fixtures and clamping elements onto machine tables with T-slots to DIN 650.

Material

- Steel, case-hardened, blackened, ground

More information

References

For size 20 refer to 23130.0020.

Drawing

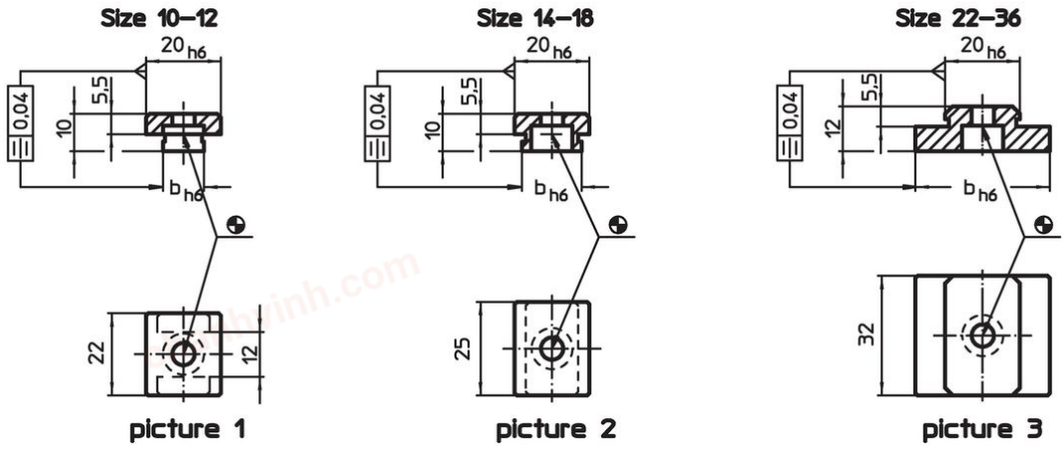

Order information

T-slot size machine b h6 [mm]	For screws ISO 4762 [mm]	[g]	Art. No.
size 10-12 – picture 1			
10	M6	19	23110.0010
12	M6	20	23110.0012
size 14-18 – picture 2			
14	M6	28	23110.0014
16	M6	30	23110.0016
18	M6	31	23110.0018
size 22-36 – picture 3			
22	M6	58	23110.0022
24	M6	63	23110.0024
28	M6	69	23110.0028
36	M6	81	23110.0036

Application example

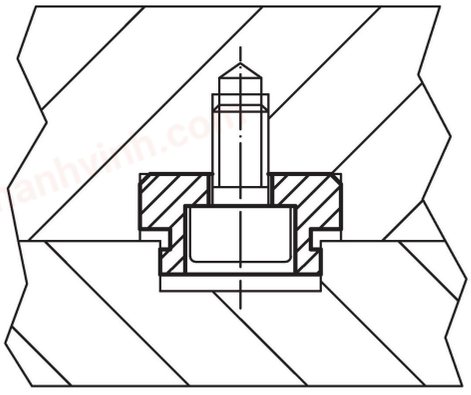

chanhvinh.com

Compliance

RoHS-compliant
Compliant with Directive 2011/65/EU [RoHS].

Does not contain SVHC substances
No SVHC substances with more than 0.1% w/w contained - SVHC list [REACH] as of 04.02.2026.

SCIP-code
N/A

Does not contain Proposition 65 substances
No Proposition 65 substances included.
https://www.P65Warnings.ca.gov/

Free from Conflict Minerals
This product does not contain any substances designated as "conflict minerals" such as tantalum, tin, gold or tungsten from the Democratic Republic of Congo or adjacent countries.

POP-compliant
Contains no persistent organic pollutants – Stockholm Convention [POP] as of September 2025.

PFAS-compliant
Contains no per- and polyfluoroalkyl substances (PFAS).

TSCA-compliant
Agent concentration in this product does not exceed the specified threshold.