chanhvinh.com

Fixture Nuts • DIN 6330 (height 1,5 d)

EH 23070.

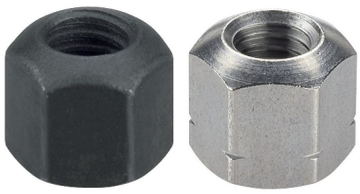

Product Description

Fixture nuts according to DIN 6330 have a spherical surface to match conical seats DIN 6319 (EH 23050.).
With this combination of fixture nut and conical seat, non-parallel clamping surfaces can be compensated.

Material

- Heat-treated steel, tempered, quality 10, phosphated
- Stainless steel 1.4305

More information

References

For torques and strengths please refer to appendix - Technical Data -

Drawing

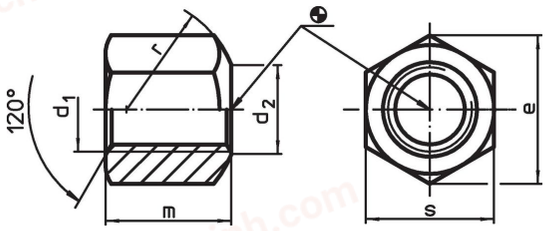

Order information

d_1	d_2	Dimensions e [mm]	m	r	s	[g]	Art. No.
with lateral spherical bearing surface, form B, Heat-treated steel							
M 6	7.0	11.5	9	9.0	10	3.8	23070.0006
M 8	9.0	15.0	12	11.0	13	8.4	23070.0008
M10	11.5	18.5	15	15.0	16	20.0	23070.0010
M12	14.0	20.8	18	17.0	18	24.0	23070.0012
M14	16.0	24.2	21	20.0	21	39.0	23070.0014[1)]
M16	18.0	27.7	24	22.0	24	55.0	23070.0016
M18	20.0	31.2	27	24.5	27	82.0	23070.0018[1)]
M20	22.0	34.6	30	27.0	30	110.0	23070.0020
M22	24.0	39.3	33	29.0	34	162.0	23070.0022[1)]
M24	26.0	41.6	36	32.0	36	192.0	23070.0024
M30	32.0	53.1	45	41.0	46	396.0	23070.0030
M36	38.0	63.5	54	50.0	55	684.0	23070.0036
with lateral spherical bearing surface, form B, Stainless steel							
M 8	9.0	15.0	12	11.0	13	9.1	23070.0108[2)]
M10	11.5	18.5	15	15.0	17	20.0	23070.0110[2)]
M12	14.0	20.8	18	17.0	19	29.0	23070.0112[2)]
M16	18.0	27.7	24	22.0	24	57.0	23070.0116[2)]
M20	22.0	34.6	30	27.0	30	113.0	23070.0120[2)]

[1)] DIN standards do not include these dimensions.

[2)] DIN standard do not include these material.

chanhvinh.com

Application example

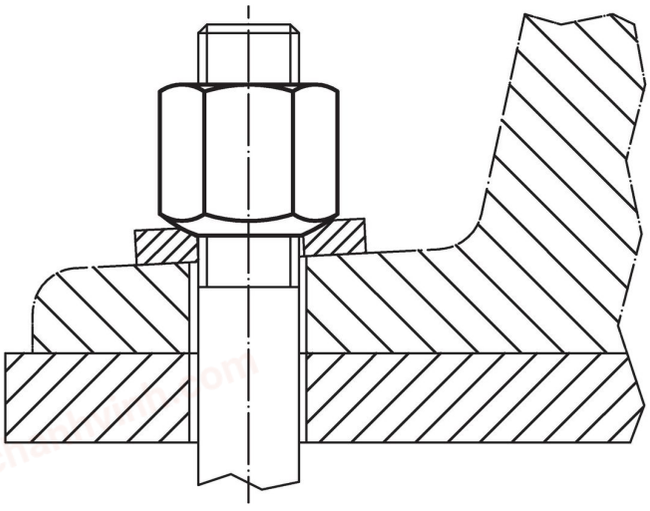

Compliance

For detailed compliance information please select the desired article number.