chanhvinh.com

Washers • high precision design
EH 23060.



Product Description

The precisely manufactured washers have an allowance in parallelism of 0,05 mm.

Material

- Heat-treated steel, tempered, blackened
- Stainless steel 1.4305

Drawing

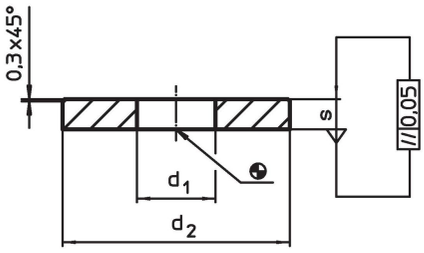

Order information

Dimensions d_1 [mm]	d_2 [mm]	s [mm]	For screws	[g]	Art. No.
Heat-treated steel					
5.3	13	3	M 5	2.5	23060.0105
6.4	17	3	M 6	4.6	23060.0106
8.4	24	4	M 8	12.0	23060.0108
10.5	30	4	M10	19.0	23060.0110
13.0	36	5	M12	34.0	23060.0113
17.0	45	5	M16	52.0	23060.0117
Stainless steel					
3.2	8	2	M 3	0.7	23060.0153
4.2	12	2	M 4	1.5	23060.0154
5.3	13	3	M 5	2.5	23060.0155
6.4	17	3	M 6	4.5	23060.0156
8.4	24	4	M 8	12.0	23060.0158
10.5	30	4	M10	19.0	23060.0160
13.0	36	5	M12	34.0	23060.0163
17.0	45	5	M16	53.0	23060.0167

Application example

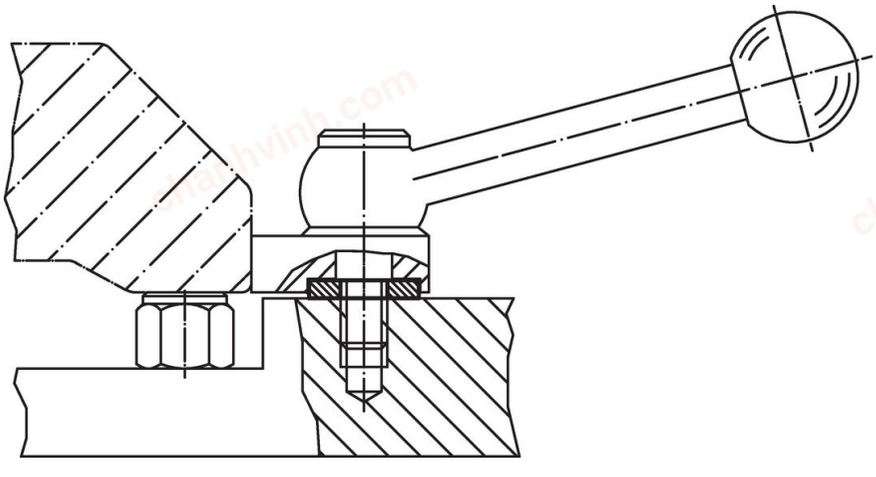

chanhvinh.com

Compliance

For detailed compliance information please select the desired article number.

chanhvinh.com