chanhvinh.com

Studs • DIN 6379 b long for nuts for T-slots
EH 23040.



Product Description

Studs combined with T-nuts DIN 508 (EH 23010./23020.), fixture nuts DIN 6330 (EH 23070.) and plain washers DIN 6340 (EH 23060.) become complete clamping studs.
These studs are characterised by the rolled thread.

Material

- Heat-treated steel

More information

References

For torques and strengths please refer to appendix - Technical Data -

Further products

- Nuts for T-Slots, DIN 508
- Studs, DIN 6379 for nuts for T-slots
- Studs, with internal hexagon, similar to DIN 6379, for nuts for T-slots
- Shaft / Plain Washers, DIN 6340 heat-treated
- Fixture Nuts, DIN 6330 (height 1,5 d)

Drawing

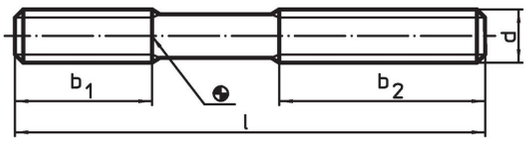

Order information

d	Dimensions l [mm]	b_1	b_2		Art. No.
quality 10.9					
M 6	**50**	15	30	8.4 g	23040.0562
M 6	**63**	15	40	11.0 g	23040.0563
M 6	**80**	15	50	14.0 g	23040.0564
M 8	**63**	20	40	19.0 g	23040.0582
M 8	**100**	20	63	31.0 g	23040.0583
M 8	**160**	20	100	49.0 g	23040.0584
M10	**80**	25	50	39.0 g	23040.0602
M10	**100**	25	75	49.0 g	23040.0603
M10	**125**	25	75	61.0 g	23040.0604
M10	**160**	25	100	78.0 g	23040.0605[1]
M10	**200**	25	122	98.0 g	23040.0606
M12	**63**[2]	–	–	44.0 g	23040.0622
M12	**80**[2]	–	–	56.0 g	23040.0623
M12	**100**	30	63	71.0 g	23040.0624[1]
M12	**125**	30	75	88.0 g	23040.0625
M12	**160**	30	100	112.0 g	23040.0626
M12	**200**	30	122	140.0 g	23040.0627
quality 8.8					
M16	**80**[2]	–	–	100.0 g	23040.0662
M16	**125**	40	63	161.0 g	23040.0664
M16	**160**	40	75	207.0 g	23040.0665
M16	**200**	40	100	260.0 g	23040.0666[1]
M16	**250**	40	125	325.0 g	23040.0667

[1] DIN standards do not include these dimensions.

[2] Throughgoing thread

chanhvinh.com

Dimensions					Art. No.
d	l	b_1	b_2		
	[mm]				
M16	**315**	40	200	402.0 g	23040.1168[1)]
M20	**125**[2)]	–	–	253.0 g	23040.1202[1)]
M20	**160**[2)]	–	–	328.0 g	23040.1207[1)]
M20	**200**	55	100	404.0 g	23040.1203[1)]
M20	**250**	55	125	509.0 g	23040.1204[1)]
M20	**315**	55	180	641.0 g	23040.1205[1)]
M20	**400**	55	250	815.0 g	23040.1208[1)]
M20	**500**	55	315	1.1 kg	23040.1206[1)]
M24	**125**[2)]	–	–	365.0 g	23040.1246[1)]
M24	**160**[2)]	–	–	467.0 g	23040.1242[1)]
M24	**200**[2)]	–	–	585.0 g	23040.1247[1)]
M24	**250**[2)]	–	–	733.0 g	23040.1243[1)]
M24	**315**	70	180	926.0 g	23040.1248[1)]
M24	**400**	70	250	1.2 kg	23040.1244[1)]
M24	**500**	70	315	1.5 kg	23040.1249[1)]

[1)] DIN standards do not include these dimensions.

[2)] Throughgoing thread

Application example



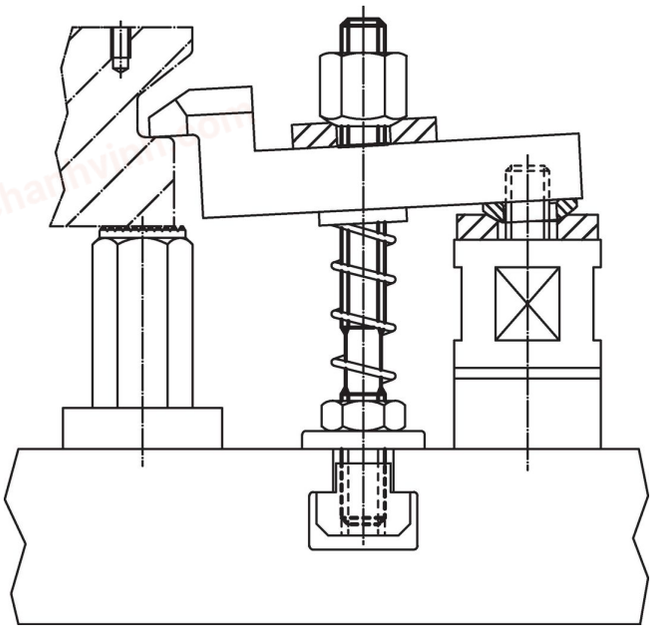

chanhvinh.com

Compliance

RoHS-compliant
Compliant with Directive 2011/65/EU [RoHS].

Does not contain SVHC substances
No SVHC substances with more than 0.1% w/w contained - SVHC list [REACH] as of 04.02.2026.

SCIP-code
N/A

Does not contain Proposition 65 substances
No Proposition 65 substances included.
https://www.P65Warnings.ca.gov/

Free from Conflict Minerals
This product does not contain any substances designated as "conflict minerals" such as tantalum, tin, gold or tungsten from the Democratic Republic of Congo or adjacent countries.

POP-compliant
Contains no persistent organic pollutants – Stockholm Convention [POP] as of September 2025.

PFAS-compliant
Contains no per- and polyfluoroalkyl substances (PFAS).

TSCA-compliant
Agent concentration in this product does not exceed the specified threshold.