chanhvinh.com

Studs • DIN 6379 for nuts for T-slots
EH 23040.



Product Description

Studs combined with T-nuts DIN 508 (EH 23010./23020.), fixture nuts DIN 6330 (EH 23070.) and plain washers DIN 6340 (EH 23060.) become complete clamping studs.
These studs are characterised by the rolled thread.

Material

- Heat-treated steel

More information

References

For torques and strengths please refer to appendix - Technical Data -
Studs with elongated dimension b_1 also available.

Further products

- Nuts for T-Slots, DIN 508
- Studs, DIN 6379 b_1 long for nuts for T-slots
- Studs, with internal hexagon, similar to DIN 6379, for nuts for T-slots
- Shaft / Plain Washers, DIN 6340 heat-treated
- Fixture Nuts, DIN 6330 (height 1,5 d)

Drawing

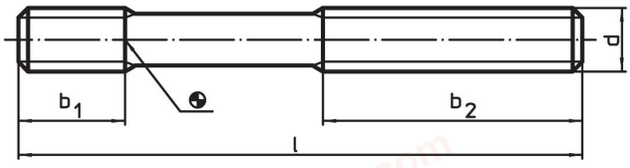

Order information

d	Dimensions l [mm]	b_1 [mm]	b_2 [mm]		Art. No.
quality 10.9					
M 6	**32**	9	16	5.3 g	23040.0061[1]
M 6	**50**	9	30	8.4 g	23040.0062
M 6	**63**	9	40	11.0 g	23040.0064[1]
M 6	**80**	9	50	13.0 g	23040.0063
M 8	**40**	11	20	12.0 g	23040.0081
M 8	**63**	11	40	19.0 g	23040.0082
M 8	**100**	11	63	31.0 g	23040.0083
M 8	**160**	11	100	49.0 g	23040.0084[1]
M10	**50**	13	25	24.0 g	23040.0101
M10	**80**	13	50	39.0 g	23040.0102
M10	**100**	13	75	50.0 g	23040.0106[1]
M10	**125**	13	75	61.0 g	23040.0103
M10	**160**	13	100	78.0 g	23040.0105[1]
M10	**200**	13	122[2]	98.0 g	23040.0104
M12	**50**	15	25	35.0 g	23040.0121
M12	**63**	15	32	44.0 g	23040.0122[1]
M12	**80**	15	50	56.0 g	23040.0123

[1] DIN standards do not include these dimensions.

[2] Dimension differ from DIN standard.

chanhvinh.com

Dimensions					Art. No.
d	l	b_1	b_2		
	[mm]				
M12	**100**	15	63	70.0 g	23040.0124[1]
M12	**125**	15	75	88.0 g	23040.0125
M12	**160**	15	100	112.0 g	23040.0127[1]
M12	**200**	15	122[2]	141.0 g	23040.0126
quality 8.8					
M14	**63**	17	32	60.0 g	23040.0141[1]
M14	**100**	17	63	96.0 g	23040.0142[1]
M14	**160**	17	100	154.0 g	23040.0143[1]
M14	**250**	17	160	241.0 g	23040.0144[1]
M16	**63**	19	32	80.0 g	23040.0161
M16	**80**	19	50	103.0 g	23040.0162[1]
M16	**100**	19	63	129.0 g	23040.0163
M16	**125**	19	75	162.0 g	23040.0164[1]
M16	**160**	19	100	207.0 g	23040.0165
M16	**200**	19	122[2]	260.0 g	23040.0167[1]
M16	**250**	19	160	325.0 g	23040.0166
M16	**315**	19	180	409.0 g	23040.0168[1]
M16	**500**	19	315	712.0 g	23040.0169[1]
M20	**80**	27	32	160.0 g	23040.0201
M20	**125**	27	70	252.0 g	23040.0202
M20	**160**	27	100	323.0 g	23040.0207[1]
M20	**200**	27	122[2]	405.0 g	23040.0203
M20	**250**	27	160	508.0 g	23040.0204[1]
M20	**315**	27	200[2]	639.0 g	23040.0205
M20	**400**	27	250	815.0 g	23040.0208[1]
M20	**500**	27	315	643.0 g	23040.0206[1]
M24	**100**	35	45	289.0 g	23040.0241
M24	**125**	35	70[2]	380.0 g	23040.0246[1]
M24	**160**	35	100	466.0 g	23040.0242
M24	**200**	35	122[2]	585.0 g	23040.0247[1]
M24	**250**	35	160	730.0 g	23040.0243
M24	**315**	35	190	923.0 g	23040.0248[1]
M24	**400**	35	250	1.2 kg	23040.0244
M24	**500**	35	315	1.5 kg	23040.0249[1]
M24	**630**	35	315	1.9 kg	23040.0245[1]
M30	**125**	43	56	573.0 g	23040.0301
M30	**200**	43	122[2]	921.0 g	23040.0302
M30	**315**	43	200[2]	1.5 kg	23040.0303
M30	**500**	43	315	1.8 kg	23040.0304
M30	**700**	43	400	3.9 kg	23040.0305[1]
M36	**160**	51	80	1.1 kg	23040.0361
M36	**250**	51	160	1.7 kg	23040.0362
M36	**400**	51	250	2.7 kg	23040.0363

[1] DIN standards do not include these dimensions.

[2] Dimension differ from DIN standard.

chanhvinh.com

Application example



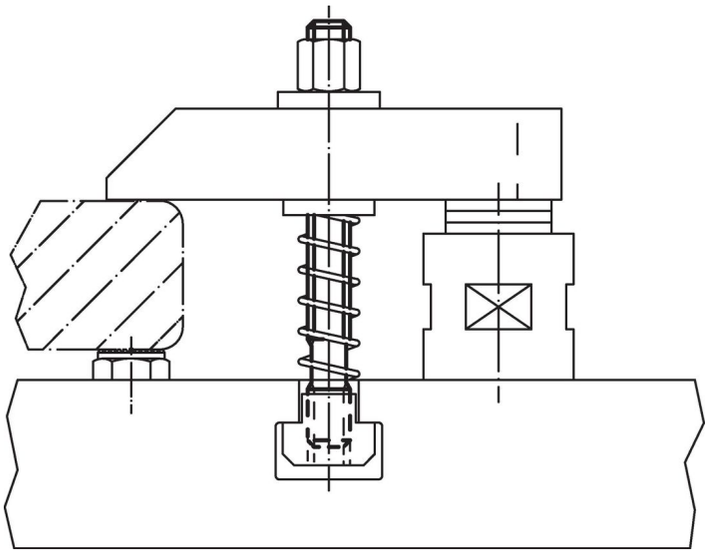

Compliance

RoHS-compliant
Compliant with Directive 2011/65/EU [RoHS].

Does not contain SVHC substances
No SVHC substances with more than 0.1% w/w contained - SVHC list [REACH] as of 04.02.2026.

SCIP-code
N/A

Does not contain Proposition 65 substances
No Proposition 65 substances included.
https://www.P65Warnings.ca.gov/

Free from Conflict Minerals
This product does not contain any substances designated as "conflict minerals" such as tantalum, tin, gold or tungsten from the Democratic Republic of Congo or adjacent countries.

POP-compliant
Contains no persistent organic pollutants – Stockholm Convention [POP] as of September 2025.

PFAS-compliant
Contains no per- and polyfluoroalkyl substances (PFAS).

TSCA-compliant
Agent concentration in this product does not exceed the specified threshold.