chanhvinh.com

Nuts for T-Slots · DIN 508

EH 23010.



Product Description

These nuts for T-slots (slot nuts) are manufactured according to DIN 508. The range is extended by other dimensions that are not included in DIN.

Material

- Heat-treated steel, quality 8, bright
- Heat-treated steel, tempered, quality 10, blackened
- Stainless steel 1.4301

Assembly

The entire loading capacity of the T-nut can only be applied if the screwing is guaranteed to be made over the total thread length of the T-nut.

More information

Notes

Customized design on request.

Drawing

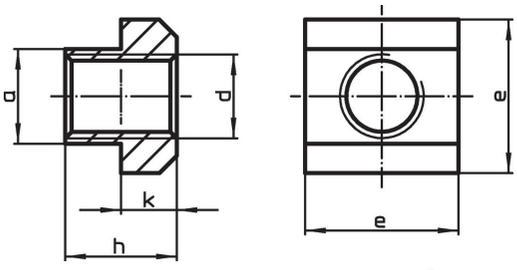

Order information

T-slot size	Dimensions					for T-slots DIN 650	Testing force to DIN 508 F min.		Art. No.
	d	a	e	h	k				
[mm]	[mm]					[mm]	[kN]		
Heat-treated steel, quality 8, bright									
5	**M 4**	4.6	9	6.5	3	5	7.0	2.4 g	23010.0051
6	**M 5**	5.6	10	8.0	4	6	11.4	3.4 g	23010.0061
8	**M 6**	7.6	13	10.0	6	8	16.0	8.3 g	23010.0081
10	**M 6**	9.6	15	12.0	6	10	16.0	14.0 g	23010.0103[1)]
10	**M 8**	9.6	15	12.0	6	10	29.0	12.0 g	23010.0101
12	**M 8**	11.6	18	14.0	7	12	29.0	23.0 g	23010.0123[1)]
12	**M10**	11.6	18	14.0	7	12	46.0	20.0 g	23010.0121
14	**M10**	13.6	22	16.0	8	14	46.0	38.0 g	23010.0143[1)]
14	**M12**	13.6	22	16.0	8	14	67.0	34.0 g	23010.0141
16	**M12**	15.6	25	18.0	9	16	67.0	55.0 g	23010.0163[1)]
16	**M14**	15.6	25	18.0	9	16	–	49.0 g	23010.0161[1)]
18	**M14**	17.6	28	20.0	10	18	–	74.0 g	23010.0183[1)]
18	**M16**	17.6	28	20.0	10	18	128.0	63.0 g	23010.0181
20	**M16**	19.6	32	24.0	12	20	128.0	116.0 g	23010.0203[1)]
20	**M18**	19.6	32	24.0	12	20	–	107.0 g	23010.0201[1)]
22	**M18**	21.6	35	28.0	14	22	–	162.0 g	23010.0223[1)]
22	**M20**	21.6	35	28.0	14	22	196.0	149.0 g	23010.0221
24	**M20**	23.6	40	32.0	16	24	196.0	236.0 g	23010.0243[1)]
24	**M22**	23.6	40	32.0	16	24	–	221.0 g	23010.0241[1)]
28	**M24**	27.6	44	36.0	18	28	282.0	317.0 g	23010.0281

[1)] DIN standards do not include these dimensions.

chanhvinh.com

T-slot size	Dimensions					for T-slots DIN 650	Testing force to DIN 508 F min.		Art. No.
	d	a	e	h	k				
[mm]	[mm]					[mm]	[kN]		
36	**M30**	35.5	54	44.0	22	36	448.0	585.0 g	23010.0361
42	**M36**	41.5	65	52.0	26	42	653.0	1000.0 g	23010.0421
48	**M42**	47.5	75	60.0	30	48	653.0	1.5 kg	23010.0481
54	**M48**	53.4	85	70.0	34	54	653.0	2.3 kg	23010.0541
Heat-treated steel, tempered, quality 10, blackened									
5	**M 4**	4.6	9	6.5	3	5	7.0	2.3 g	23010.0052
6	**M 5**	5.6	10	8.0	4	6	11.4	3.3 g	23010.0062
8	**M 6**	7.6	13	10.0	6	8	16.0	8.3 g	23010.0082
10	**M 6**	9.6	15	12.0	6	10	16.0	14.0 g	23010.0104[1)]
10	**M 8**	9.6	15	12.0	6	10	29.0	13.0 g	23010.0102
12	**M 8**	11.6	18	14.0	7	12	29.0	23.0 g	23010.0124[1)]
12	**M10**	11.6	18	14.0	7	12	46.0	21.0 g	23010.0122
14	**M 6**	13.6	22	16.0	8	14	16.0	43.0 g	23010.0146[1)]
14	**M 8**	13.6	22	16.0	8	14	29.0	41.0 g	23010.0145[1)]
14	**M10**	13.6	22	16.0	8	14	46.0	37.0 g	23010.0144[1)]
14	**M12**	13.6	22	16.0	8	14	67.0	35.0 g	23010.0142
16	**M 8**	15.6	25	18.0	9	16	29.0	62.0 g	23010.0166[1)]
16	**M10**	15.6	25	18.0	9	16	46.0	58.0 g	23010.0165[1)]
16	**M12**	15.6	25	18.0	9	16	67.0	54.0 g	23010.0164[1)]
16	**M14**	15.6	25	18.0	9	16	–	49.0 g	23010.0162[1)]
18	**M 8**	17.6	28	20.0	10	18	29.0	89.0 g	23010.0187[1)]
18	**M10**	17.6	28	20.0	10	18	46.0	85.0 g	23010.0186[1)]
18	**M12**	17.6	28	20.0	10	18	67.0	81.0 g	23010.0185[1)]
18	**M14**	17.6	28	20.0	10	18	–	75.0 g	23010.0184[1)]
18	**M16**	17.6	28	20.0	10	18	128.0	68.0 g	23010.0182
20	**M12**	19.6	32	24.0	12	20	67.0	131.0 g	23010.0205[1)]
20	**M16**	19.6	32	24.0	12	20	128.0	119.0 g	23010.0204[1)]
20	**M18**	19.6	32	24.0	12	20	–	108.0 g	23010.0202[1)]
22	**M12**	21.6	35	28.0	14	22	67.0	189.0 g	23010.0225[1)]
22	**M16**	21.6	35	28.0	14	22	128.0	172.0 g	23010.0226[1)]
22	**M18**	21.6	35	28.0	14	22	–	161.0 g	23010.0224[1)]
22	**M20**	21.6	35	28.0	14	22	196.0	151.0 g	23010.0222
24	**M16**	23.6	40	32.0	16	24	128.0	262.0 g	23010.0246[1)]
24	**M20**	23.6	40	32.0	16	24	196.0	237.0 g	23010.0244[1)]
24	**M22**	23.6	40	32.0	16	24	–	221.0 g	23010.0242[1)]
28	**M16**	27.6	44	36.0	18	28	128.0	375.0 g	23010.0286[1)]
28	**M20**	27.6	44	36.0	18	28	196.0	349.0 g	23010.0284[1)]
28	**M22**	27.6	44	36.0	18	28	–	332.0 g	23010.0283[1)]
28	**M24**	27.6	44	36.0	18	28	282.0	316.0 g	23010.0282
32	**M27**	31.5	50	40.0	20	32	–	460.0 g	23010.0322[1)]
36	**M24**	35.5	54	44.0	22	36	282.0	663.0 g	23010.0364[1)]
36	**M30**	35.5	54	44.0	22	36	448.0	582.0 g	23010.0362
42	**M36**	41.5	65	52.0	26	42	653.0	996.0 g	23010.0422
48	**M42**	47.5	75	60.0	30	48	653.0	1.5 kg	23010.0482
54	**M48**	53.4	85	70.0	34	54	653.0	2.1 kg	23010.0542

[1)] DIN standards do not include these dimensions.

chanhvinh.com

T-slot size	Dimensions					for T-slots DIN 650	Testing force to DIN 508 F min.		Art. No.
	d	a	e	h	k				
[mm]	[mm]					[mm]	[kN]		
Stainless steel 1.4301									
8	**M 6**	7.6	13	10.0	6	8	16.0	8.4 g	23010.0721
10	**M 8**	9.6	15	12.0	6	10	29.0	13.0 g	23010.0731
12	**M10**	11.6	18	14.0	7	12	46.0	20.0 g	23010.0741
14	**M12**	13.6	22	16.0	8	14	67.0	35.0 g	23010.0751
16	**M14**	15.6	25	18.0	9	16	–	51.0 g	23010.0761[1)]
18	**M16**	17.6	28	20.0	10	18	128.0	70.0 g	23010.0781

[1)] DIN standards do not include these dimensions.

Application example

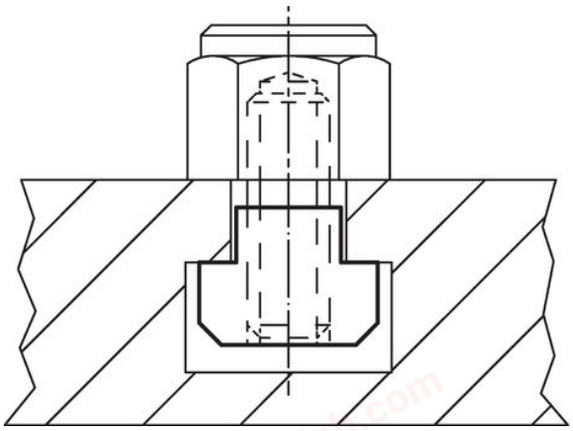

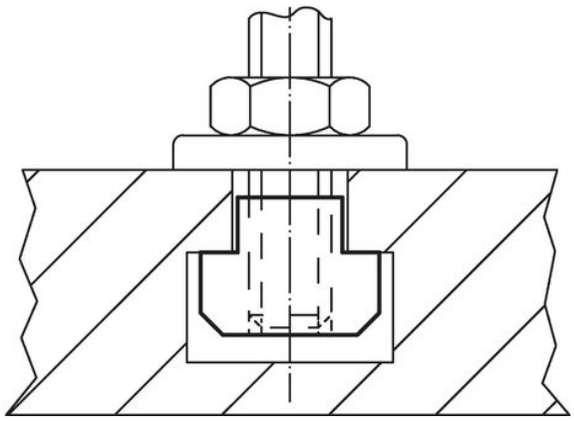

Compliance

RoHS-compliant
Compliant with Directive 2011/65/EU [RoHS].

Does not contain SVHC substances
No SVHC substances with more than 0.1% w/w contained - SVHC list [REACH] as of 04.02.2026.

SCIP-code
N/A

Contains Proposition 65 substances



Nickel can cause cancer from exposure.
https://www.P65Warnings.ca.gov/

Free from Conflict Minerals
This product does not contain any substances designated as "conflict minerals" such as tantalum, tin, gold or tungsten from the Democratic Republic of Congo or adjacent countries.

POP-compliant
Contains no persistent organic pollutants – Stockholm Convention [POP] as of September 2025.

PFAS-compliant
Contains no per- and polyfluoroalkyl substances (PFAS).

TSCA-compliant
Agent concentration in this product does not exceed the specified threshold.