chanhvinh.com

Fork Heads • DIN 71752, without pin

EH 22983.



Product Description

Fork heads without pins are used for the articulated connection of components and provide reliable transmission of tensile and compressive forces. They are suitable for linkages, lever arms, adjustment elements and connections to pneumatic or hydraulic cylinders. Generally, they are used as connecting elements for simple movements where angular misalignment also needs to be accommodated.
Typical fields of application include mechanical engineering, plant construction, fixture construction, automotive engineering and assemblies with linear or pivoting movements.
The pinless design allows the appropriate connecting element to be selected for the specific application or an existing pin to be reused.
The fork head is connected via its internal thread to a suitable threaded element, such as a threaded rod or piston rod. The component to be connected is inserted into the clevis opening and secured with a separately selected pin and a suitable retaining element.
This creates a movable, detachable connection that permits angular movement while reliably transmitting forces. The connection can also be designed to be detachable, which simplifies assembly, maintenance, replacement and readjustment.
Fork heads according to DIN 71752 have a standardised design, robust construction and reliable function. The pinless version provides flexibility in the choice of connecting element and allows application-specific combinations with suitable pins and retaining elements.
The flexible bearing arrangement accommodates pivoting movements and moderate angular misalignment between the connected components. This helps ensure reliable force transmission and reduces unwanted stresses in the assembly.
They offer the following features and advantages:

- Reliable transmission of tensile and compressive forces
- Movable and detachable connection between components
- Standard, proven design according to DIN 71752
- Flexible choice of pin and retaining element
- Can be combined with existing or application-specific connecting elements
- Easy assembly, removal and readjustment
- Suitable for linkages, lever arms, adjustment elements and pneumatic and hydraulic cylinders
- Accommodates pivoting movements and moderate angular misalignment
- Robust design for mechanically demanding applications
- Maintenance-friendly connection solution for repetitive movements

Material

- Steel, zinc-plated by galvanization, passivated
- Stainless steel 1.4301

Drawing

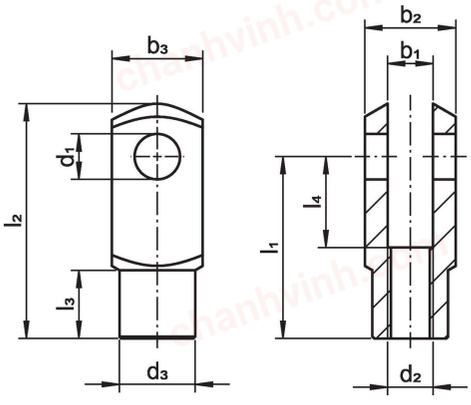

Order information

Dimensions [mm]										[g]	Art. No.
d_1	l_1	d_2	d_3	l_2	l_3	l_4	b_1	b_2	b_3		
standard thread, Steel											
4	**16**	M 4	8	21	6.0	8	4	8	8	4.9	22983.0004
4	**24**	M 4	8	29	6.0	16	4	8	8	6.0	22983.0104
5	**20**	M 5	9	26	7.5	10	5	10	10	8.6	22983.0005
5	**30**	M 5	9	36	7.5	20	5	10	10	12.0	22983.0105

chanhvinh.com

Dimensions											Art. No.
d_1	l_1	d_2	d_3	l_2	l_3	l_4	b_1	b_2	b_3	[g]	
				[mm]							
6	**24**	M 6	10	31	9.0	12	6	12	12	15.0	22983.0006
6	**36**	M 6	10	43	9.0	24	6	12	12	21.0	22983.0106
8	**32**	M 8	14	42	12.0	16	8	16	16	34.0	22983.0008
8	**48**	M 8	14	58	12.0	32	8	16	16	52.0	22983.0108
10	**40**	M10	18	52	15.0	20	10	20	20	72.0	22983.0010
10	**60**	M10	18	72	15.0	40	10	20	20	102.0	22983.0110
12	**48**	M12	20	62	18.0	24	12	24	24	115.0	22983.0012
12	**72**	M12	20	86	18.0	48	12	24	24	168.0	22983.0112
14	**56**	M14	24	72	22.5	28	14	27	27	170.0	22983.0014
14	**85**	M14	24	101	22.5	56	14	27	27	252.0	22983.0114
16	**64**	M16	26	83	24.0	32	16	32	32	268.0	22983.0016
16	**96**	M16	26	115	24.0	64	16	32	32	394.0	22983.0116
20	**80**	M20	34	105	30.0	40	20	40	40	557.0	22983.0020
fine-pitch thread, Steel											
8	**32**	M 8 x 1,0	14	42	12.0	16	8	16	16	37.0	22983.1008
8	**48**	M 8 x 1,0	14	58	12.0	32	8	16	16	51.0	22983.1108
10	**40**	M10 x 1,25	18	52	15.0	20	10	20	20	71.0	22983.1010
10	**60**	M10 x 1,25	18	72	15.0	40	10	20	20	103.0	22983.1110
12	**48**	M12 x 1,25	20	62	18.0	24	12	24	24	112.0	22983.1012
12	**72**	M12 x 1,25	20	86	18.0	48	12	24	24	167.0	22983.1112
14	**56**	M14 x 1,5	24	72	22.5	28	14	27	27	171.0	22983.1014
14	**85**	M14 x 1,5	24	101	22.5	56	14	27	27	250.0	22983.1114
16	**64**	M16 x 1,5	26	83	24.0	32	16	32	32	258.0	22983.1016
16	**96**	M16 x 1,5	26	115	24.0	64	16	32	32	394.0	22983.1116
left hand thread, Steel											
5	**20**	M 5	9	26	7.5	10	5	10	10	13.0	22983.2005
5	**30**	M 5	9	36	7.5	20	5	10	10	13.0	22983.2105
6	**24**	M 6	10	31	9.0	12	6	12	12	16.0	22983.2006
6	**36**	M 6	10	43	9.0	24	6	12	12	18.0	22983.2106
8	**32**	M 8	14	42	12.0	16	8	16	16	35.0	22983.2008
8	**48**	M 8	14	58	12.0	32	8	16	16	50.0	22983.2108
10	**40**	M10	18	52	15.0	20	10	20	20	71.0	22983.2010
10	**60**	M10	18	72	15.0	40	10	20	20	100.0	22983.2110
12	**48**	M12	20	62	18.0	24	12	24	24	110.0	22983.2012
12	**72**	M12	20	86	18.0	48	12	24	24	167.0	22983.2112
14	**56**	M14	24	72	22.5	28	14	27	27	170.0	22983.2014
14	**85**	M14	24	101	22.5	56	14	27	27	247.0	22983.2114
16	**64**	M16	26	83	24.0	32	16	32	32	266.0	22983.2016
16	**96**	M16	26	115	24.0	64	16	32	32	393.0	22983.2116
20	**80**	M20	34	105	30.0	40	20	40	40	549.0	22983.2020
standard thread, Stainless steel											
4	**16**	M 4	8	21	6.0	8	4	8	8	5.1	22983.3004
4	**24**	M 4	8	29	6.0	16	4	8	8	6.7	22983.3104
5	**20**	M 5	9	26	7.5	10	5	10	10	9.3	22983.3005
5	**30**	M 5	9	36	7.5	20	5	10	10	13.0	22983.3105
6	**24**	M 6	10	31	9.0	12	6	12	12	14.0	22983.3006
6	**36**	M 6	10	43	9.0	24	6	12	12	21.0	22983.3106
8	**32**	M 8	14	42	12.0	16	8	16	16	36.0	22983.3008
8	**48**	M 8	14	58	12.0	32	8	16	16	49.0	22983.3108
10	**40**	M10	18	52	15.0	20	10	20	20	73.0	22983.3010
10	**60**	M10	18	72	15.0	40	10	20	20	102.0	22983.3110
12	**48**	M12	20	62	18.0	24	12	24	24	116.0	22983.3012
12	**72**	M12	20	86	18.0	48	12	24	24	168.0	22983.3112
14	**56**	M14	24	72	22.5	28	14	27	27	173.0	22983.3014
14	**85**	M14	24	101	22.5	56	14	27	27	248.0	22983.3114
16	**64**	M16	26	83	24.0	32	16	32	32	272.0	22983.3016
16	**96**	M16	26	115	24.0	64	16	32	32	399.0	22983.3116
20	**80**	M20	34	105	30.0	40	20	40	40	560.0	22983.3020

chanhvinh.com

Application example

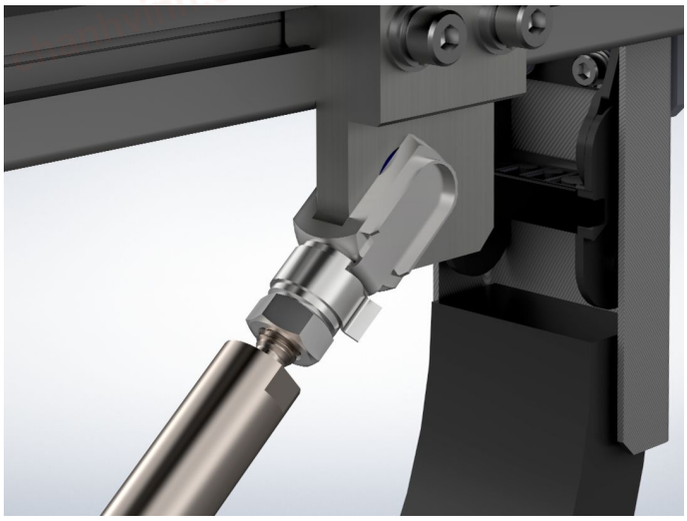

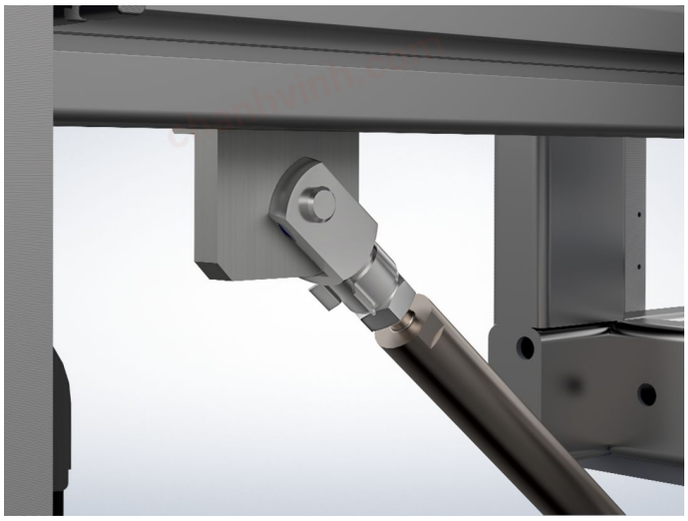

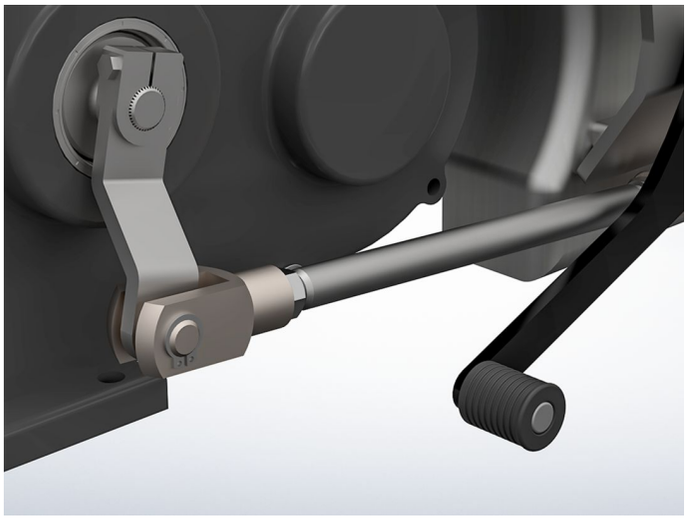

Compliance

RoHS-compliant
Compliant with Directive 2011/65/EU [RoHS].

Does not contain SVHC substances
No SVHC substances with more than 0.1% w/w contained - SVHC list [REACH] as of 04.02.2026.

SCIP-code
N/A

Does not contain Proposition 65 substances
No Proposition 65 substances included.
https://www.P65Warnings.ca.gov/

Contains Conflict Minerals

POP-compliant
Contains no persistent organic pollutants – Stockholm Convention [POP] as of September 2025.

PFAS-compliant
Contains no per- and polyfluoroalkyl substances (PFAS).

TSCA-compliant
Agent concentration in this product does not exceed the specified threshold.