chanhvinh.com

Setting Dies • for Expander sealing plug
EH 22880.



Product Description

Expander® sealing plugs are used for safe, quick and economic sealing of bore holes in fluid technology, e.g. hydraulic drilling holes in jig and fixture construction. Assembly is effected by pressing in the sealing plug into the drilling hole by means of the prescribed setting die.

Material

- Tool steel, heat-treated

Drawing

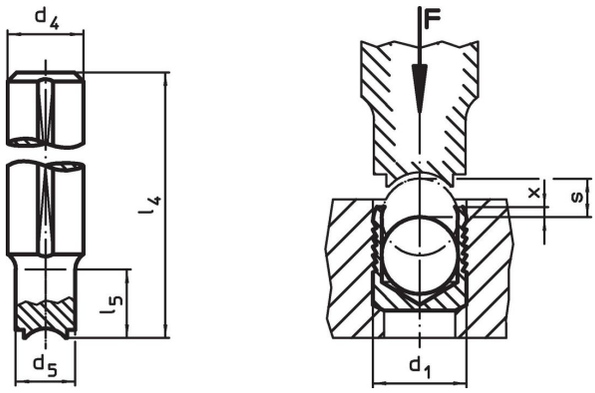

Order information

Dimensions								
d_1	d_4 h9	d_5	l_4	l_5	x ±0.2	s		Art. No.
			[mm]				[g]	
3	10	2.8	100	10	0.4	1.20	53	22880.0153
4	10	3.8	100	10	0.2	1.50	54	22880.0154
5	10	4.8	100	12	0.4	2.00	53	22880.0155
6	10	5.8	100	15	0.4	2.50	64	22880.0156
7	10	6.8	100	18	0.4	3.00	54	22880.0157
8	10	7.8	100	20	0.3	3.50	55	22880.0158
9	14	8.8	100	22	0.4	4.00	102	22880.0159
10	14	9.8	100	25	0.4	4.50	103	22880.0160
12	14	11.7	150	30	0.4	5.50	167	22880.0162
14	20	13.7	150	35	0.4	6.35	316	22880.0164
16	20	15.7	150	40	0.6	7.00	326	22880.0166
18	20	17.7	150	45	0.6	8.00	340	22880.0168
20	25	19.7	150	50	0.8	9.00	495	22880.0170
22	25	21.7	150	55	0.8	10.00	516	22880.0172

chanhvinh.com

Application example

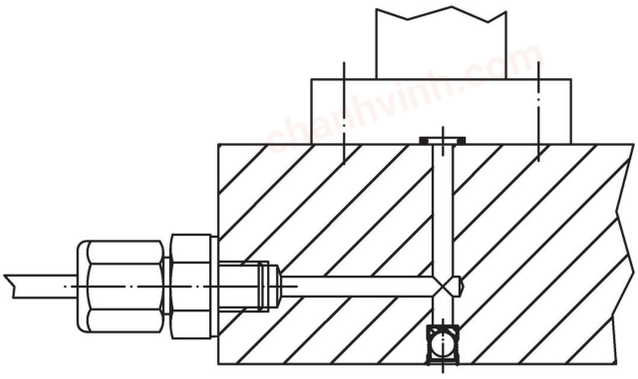

Compliance

RoHS-compliant
Compliant with Directive 2011/65/EU [RoHS].

Does not contain SVHC substances
No SVHC substances with more than 0.1% w/w contained - SVHC list [REACH] as of 04.02.2026.

SCIP-code
N/A

Does not contain Proposition 65 substances
No Proposition 65 substances included.
https://www.P65Warnings.ca.gov/

Free from Conflict Minerals
This product does not contain any substances designated as "conflict minerals" such as tantalum, tin, gold or tungsten from the Democratic Republic of Congo or adjacent countries.

POP-compliant
Contains no persistent organic pollutants – Stockholm Convention [POP] as of September 2025.

PFAS-compliant
Contains no per- and polyfluoroalkyl substances (PFAS).

TSCA-compliant
Agent concentration in this product does not exceed the specified threshold.