chanhvinh.com

Expander® Sealing Plugs • body from stainless steel

EH 22880.



Product Description

Expander® sealing plugs are used for safe, quick and economic sealing of bore holes in fluid technology, e.g. hydraulic drilling holes in jig and fixture construction. Assembly is effected by pressing in the sealing plug into the drilling hole by means of the prescribed setting die.

Material

Body
- Stainless steel 1.4305

Ball
- Roller bearing steel, heat-treated, tempered

Assembly

The design guidelines and assembly instructions are supplied with the product and are also available for download.
Please observe the permissible operating and test pressures for the respective installation materials. A corresponding table can be found under the "Installation Examples" tab.

More information

Further products

- Expander® Sealing Plugs, body from case-hardened steel
- Expander® Sealing Plugs, body and ball from stainless steel
- Setting Dies, for Expander® sealing plug

Drawing

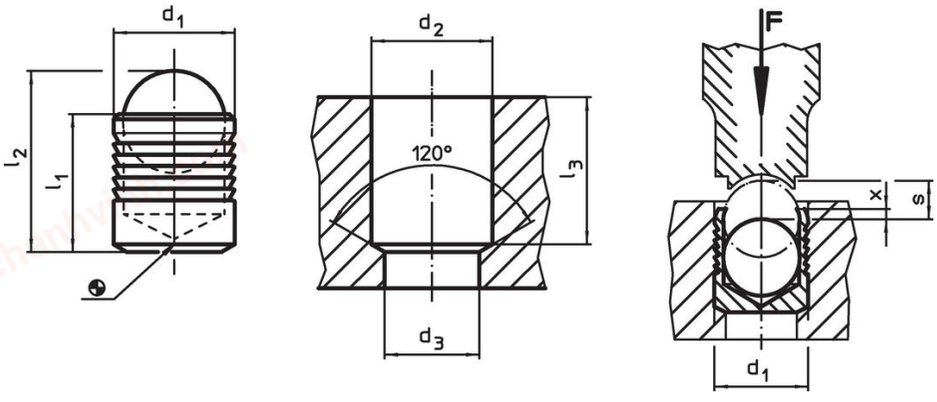

Order information

Dimensions									Art. No.
d_1	l_1	l_2 ~	d_2 +0.1	d_3 max.	l_3 min.	x ±0.2	s	[g]	
				[mm]					
body from stainless steel, ball from steel									
3	3.6	4.6	3	2.2	3.4	0.4	1.20	0.2	22880.0053
4	4.0	5.2	4	3.3	3.8	0.2	1.50	0.4	22880.0054
5	5.5	7.0	5	4.3	5.3	0.4	2.00	0.7	22880.0055
6	6.5	8.6	6	5.3	6.3	0.4	2.50	1.3	22880.0056
7	7.5	10.1	7	6.4	7.3	0.4	3.00	1.9	22880.0057
8	8.5	11.7	8	7.4	8.3	0.3	3.50	3.2	22880.0058
9	10.0	13.7	9	8.4	9.8	0.4	4.00	4.5	22880.0059
10	11.0	15.2	10	9.4	10.8	0.4	4.50	6.1	22880.0060
12	13.0	18.0	12	10.6	12.8	0.4	5.50	9.7	22880.0062
14	15.0	20.8	14	12.7	14.5	0.4	6.35	15.0	22880.0064
16	17.0	23.7	16	14.7	16.5	0.6	7.00	22.0	22880.0066
18	19.0	26.3	18	16.7	18.5	0.6	8.00	31.0	22880.0068
20	22.0	30.5	20	18.7	21.5	0.8	9.00	46.0	22880.0070
22	25.0	34.2	22	20.7	24.5	0.8	10.00	58.0	22880.0072

chanhvinh.com

Application example

Working and control pressures for Expander® sealing plug, sleeve from stainless steel 1.4305							
basic material	ETG-100 AISI 1144	C15Pb 1.0403	GG-25 DIN 1691	GGG-50 DIN 1693	AlCuMg2 3.1354	AlMgSiPb 3.0615	G-AlSi7Mg 3.2371
d_1 3-10 mm	p [bar]						
	450	450	450	450	450	380	380
	pTest [bar]						
	1400	1400	1400	1400	1400	1200	1200
d_1 12-22 mm	p [bar]						
	350	350	350	350	350	280	280
	pTest [bar]						
	1150	1150	1150	1150	1150	900	900

Compliance

RoHS-compliant
Compliant with Directive 2011/65/EU [RoHS].

Does not contain SVHC substances
No SVHC substances with more than 0.1% w/w contained - SVHC list [REACH] as of 04.02.2026.

SCIP-code
N/A

Does not contain Proposition 65 substances
No Proposition 65 substances included.
https://www.P65Warnings.ca.gov/

Free from Conflict Minerals
This product does not contain any substances designated as "conflict minerals" such as tantalum, tin, gold or tungsten from the Democratic Republic of Congo or adjacent countries.

POP-compliant
Contains no persistent organic pollutants – Stockholm Convention [POP] as of September 2025.

PFAS-compliant
Contains no per- and polyfluoroalkyl substances (PFAS).

TSCA-compliant
Agent concentration in this product does not exceed the specified threshold.