chanhvinh.com

Expander® Sealing Plugs • body from case-hardened steel
EH 22880.



Product Description

Expander® sealing plugs are used for safe, quick and economic sealing of bore holes in fluid technology, e.g. hydraulic drilling holes in jig and fixture construction. Assembly is effected by pressing in the sealing plug into the drilling hole by means of the prescribed setting die.

Material

Body
- Case-hardened steel, zinc-plated, thick-film passivated

Ball
- Roller bearing steel, heat-treated, tempered

Assembly

The design guidelines and assembly instructions are supplied with the product and are also available for download.
Please observe the permissible operating and test pressures for the respective installation materials. A corresponding table can be found under the "Installation Examples" tab.

More information

Further products

- Expander® Sealing Plugs, body from stainless steel
- Expander® Sealing Plugs, body and ball from stainless steel
- Setting Dies, for Expander® sealing plug

Drawing

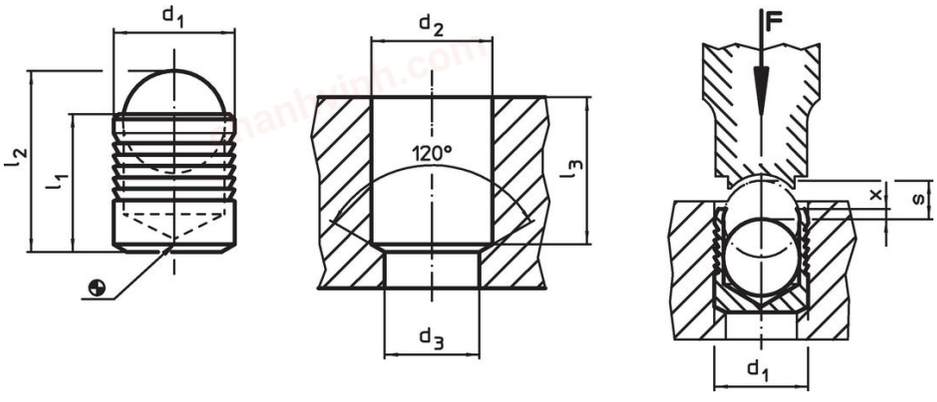

Order information

Dimensions									Art. No.
d_1	l_1	l_2 ~	d_2 +0.1	d_3 max.	l_3 min.	x ±0.2	s	[g]	
				[mm]					
4	4.0	5.2	4	3.3	3.8	0.2	1.50	0.4	22880.0004
5	5.5	7.0	5	4.3	5.3	0.4	2.00	0.8	22880.0005
6	6.5	8.6	6	5.3	6.3	0.4	2.50	1.2	22880.0006
7	7.5	10.1	7	6.4	7.3	0.4	3.00	1.9	22880.0007
8	8.5	11.7	8	7.4	8.3	0.3	3.50	2.8	22880.0008
9	10.0	13.7	9	8.4	9.8	0.4	4.00	4.2	22880.0009
10	11.0	15.2	10	9.4	10.8	0.4	4.50	6.1	22880.0010
12	13.0	18.0	12	10.6	12.8	0.4	5.50	9.6	22880.0012
14	15.0	20.8	14	12.7	14.5	0.4	6.35	15.0	22880.0014
16	17.0	23.7	16	14.7	16.5	0.6	7.00	22.0	22880.0016
18	19.0	26.3	18	16.7	18.5	0.6	8.00	32.0	22880.0018
20	22.0	30.5	20	18.7	21.5	0.8	9.00	44.0	22880.0020
22	25.0	34.2	22	20.7	24.5	0.8	10.00	58.0	22880.0022

chanhvinh.com

Application example

Working and control pressures for Expander® sealing plug, sleeve from case hardened steel 1.0403							
basic material	ETG-100 AISI 1144	C15Pb 1.0403	GG-25 DIN 1691	GGG-50 DIN 1693	AlCuMg2 3.1354	AlMgSiPb 3.0615	G-AlSi7Mg 3.2371
d_1 4-10 mm	p [bar]						
	350	350	350	350	350	320	320
	pTest [bar]						
	1100	1100	1100	1100	1100	1000	1000
d_1 12-22 mm	p [bar]						
	280	280	280	280	280	250	250
	pTest [bar]						
	900	900	900	900	900	800	800

Compliance

RoHS-compliant
Contains lead - compliant according to exceptions 6(a)-I / 6(b)-II / 6(c).

Contains SVHC substances >0,1% w/w
Contains lead - SVHC list [REACH] as of 04.02.2026.

SCIP-code
3e93609d-8819-4950-a9ff-0f86bc4723f7

Contains Proposition 65 substances
Lead can lead to cancer, developmental disorders, and reproductive damage in men and to reproductive damage in women from exposure. https://www.P65Warnings.ca.gov/

Free from Conflict Minerals
This product does not contain any substances designated as "conflict minerals" such as tantalum, tin, gold or tungsten from the Democratic Republic of Congo or adjacent countries.

POP-compliant
Contains no persistent organic pollutants – Stockholm Convention [POP] as of September 2025.

PFAS-compliant
Contains no per- and polyfluoroalkyl substances (PFAS).

TSCA-compliant
Agent concentration in this product does not exceed the specified threshold.