chanhvinh.com

Oil-Sight Glasses

EH 22860.



Product Description

Oil-sight glasses can be used for level control in tanks without excess pressure.

Material

Seal ring
- Resistant to oil and gasoline

Ring nut
- Aluminium Al

Oil-sight glass
- Plexiglass (PMMA) clear

Reflector
- Plastic, white

Assembly

Can be fitted without thread in H11 borehole. Sealing by simply tightening the ring nut.

Drawing

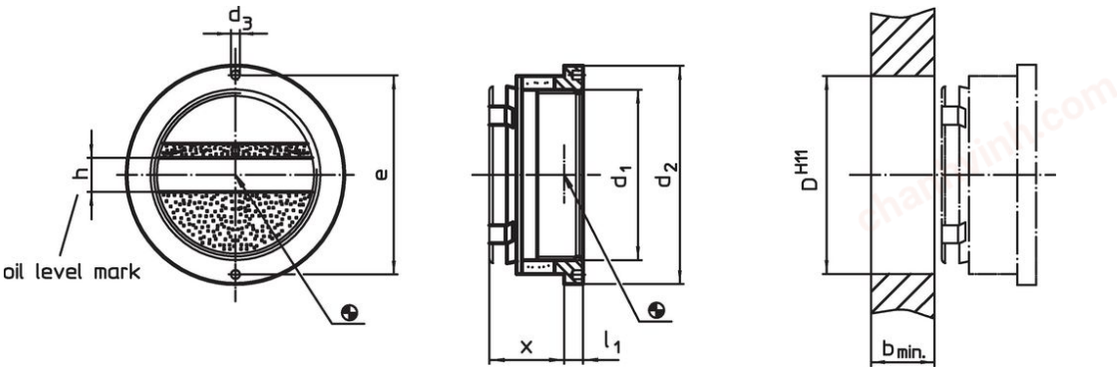

Order information

Size (sight opening) d_1	Dimensions d_2	d_3	x ~	l_1	b min.	h	e	Location hole D H11	min. [°C]	max. [°C]	[g]	Art. No.
			[mm]					[mm]				
without oil level mark												
16	25	2.2	15	3.5	9	–	21.0	20	-20	70	9.4	22860.0016
22	35	3.0	15	4.5	10	–	30.0	28	-20	70	18.0	22860.0022
32	45	3.0	18	5.5	12	–	40.0	38	-20	70	34.0	22860.0032
50	64	3.0	22	5.5	14	–	58.5	58	-20	70	86.0	22860.0050
with oil level mark												
16	25	2.2	15	3.5	9	5	21.0	20	-20	70	9.4	22860.0116
22	35	3.0	15	4.5	10	6	30.0	28	-20	70	18.0	22860.0122
32	45	3.0	18	5.5	12	8	40.0	38	-20	70	34.0	22860.0132
50	64	3.0	22	5.5	14	10	58.5	58	-20	70	84.0	22860.0150

chanhvinh.com

Accessories

	Dimensions				Art. No.
	Size (sight opening) d_1	d h9 [mm]	e	[g]	
assembly tool					
	**16**	2.0	21.0	16	22860.0816
	22	2.8	30.0	30	22860.0822
	32	2.8	40.0	36	22860.0832
	50	2.8	58.5	49	22860.0850

Application example

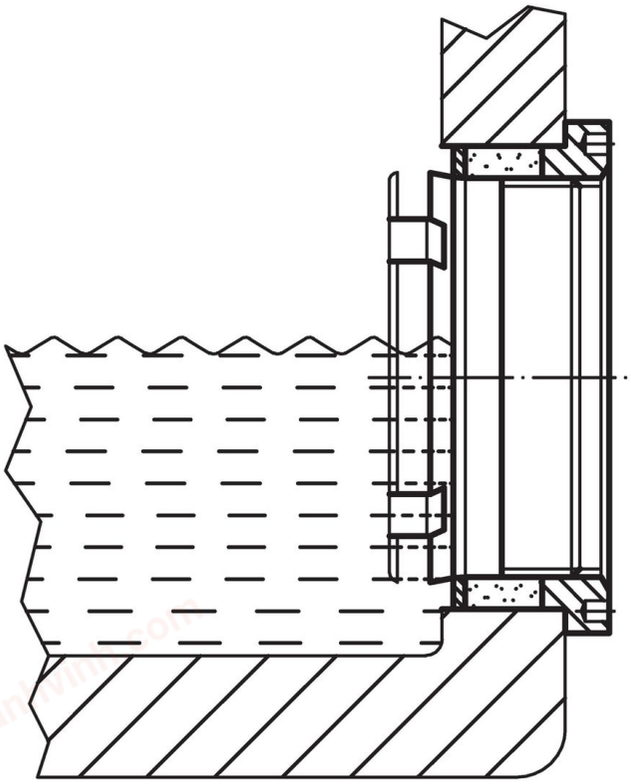

Compliance

For detailed compliance information please select the desired article number.