chanhvinh.com

Positioning Sensors • self-aligning, pneumatic
EH 22800.



Product Description

Used in jigs and fixtures as positioning control for unmachined workpieces (version flat-faced ball, bearing surface ribbed) or pre-machined workpieces (flat-faced ball, bearing surface plain).
The response accuracy for the flat-faced ball version with plain bearing surface is in the range of 0.015-0.075 mm depending on the workpiece and for the flat-faced ball version with ribbed bearing surface constant at 0.005 mm.
The system is monitored by the compressed-air backwash which indicated on the monitoring unit (art. no. 22800.0701).

Material

Ball
- Ball-bearing steel, hardened

Body
- Heat-treated steel, tempered, phosphated

More information

Notes

Further information on request.

Further products

- Monitoring Units, for positioning sensors, pneumatic

Drawing

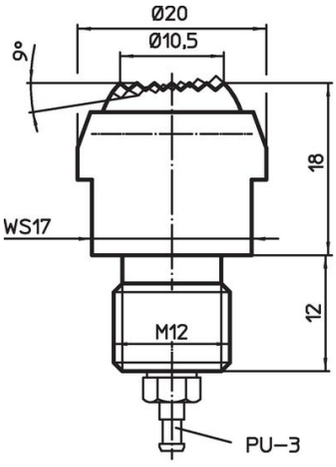

picture 1

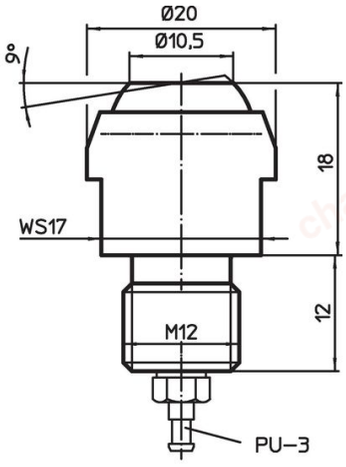

picture 2

Order information

Load capacity for static load max. [kN]	[g]	Art. No.
flat-faced ball, bearing surface ribbed		
15	49	22800.0220
flat-faced ball, bearing surface plain		
15	49	22800.0320

chanhvinh.com

Application example

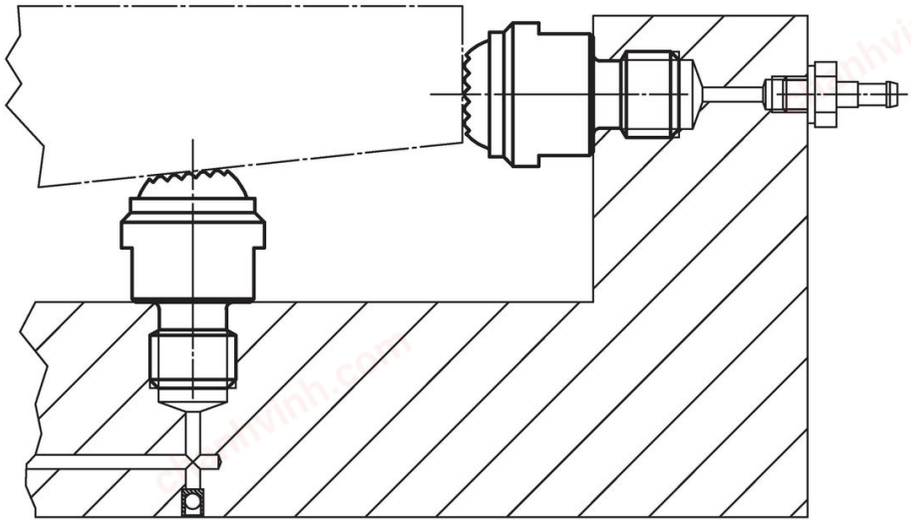

Compliance

RoHS-compliant
Compliant with Directive 2011/65/EU [RoHS].

Does not contain SVHC substances
No SVHC substances with more than 0.1% w/w contained - SVHC list [REACH] as of 04.02.2026.

SCIP-code
N/A

Does not contain Proposition 65 substances
No Proposition 65 substances included.
https://www.P65Warnings.ca.gov/

Free from Conflict Minerals
This product does not contain any substances designated as "conflict minerals" such as tantalum, tin, gold or tungsten from the Democratic Republic of Congo or adjacent countries.

POP-compliant
Contains no persistent organic pollutants – Stockholm Convention [POP] as of September 2025.

PFAS-compliant
Contains no per- and polyfluoroalkyl substances (PFAS).

TSCA-compliant
Agent concentration in this product does not exceed the specified threshold.