chanhvinh.com

Thrust Screws • with brass pad

EH 22760.



Product Description

Thrust screws with brass pad are used for gentle clamping and applying pressure to workpieces. They are particularly suitable for threaded spindles, axles, shafts and surface-treated components where direct pressure marks or damage caused by a steel screw should be minimized.
The brass pad forms the contact surface with the workpiece and transmits the applied force over a large area. The soft material provides gentle force transmission and reduces the risk of damage to the contact surface.
The headless construction allows a variable screw-in depth and space-saving integration into the assembly. The screw is actuated using a hex key.
This product group offers the following features and advantages:

- Brass pad for gentle force application
- Force transmission to the workpiece
- Reduced risk of pressure marks and Damage
- Suitable for threaded spindles, axles and shafts
- Compact headless design
- Variable screw penetration depth to suit the installation situation
- Adjustment with a hexagon key
- Versions in steel or stainless steel

Material

Pad

- Brass

Screw

- Heat-treated steel, 1200 ±100 N/mm^2
- Stainless steel 1.4305

More information

Further products

- Thrust Screws, with plastic pad

Drawing

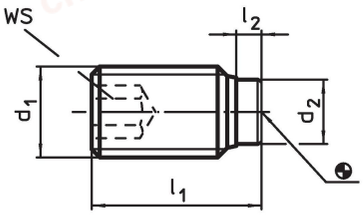

Order information

Dimensions				WS	max.		Art. No.
d_1	l_1	l_2	d_2	[mm]	[°C]	[g]	
Heat-treated steel							
M 3	**5.0**	1.0	1.5	1.5	250	0.1	22760.0032
M 3	**7.5**	1.0	1.5	1.5	250	0.2	22760.0034
M 3	**10.0**	1.0	1.5	1.5	250	0.4	22760.0036
M 4	**5.0**	1.0	2.5	2.0	250	0.2	22760.0040
M 4	**6.5**	1.2	2.5	2.0	250	0.3	22760.0042
M 4	**10.5**	1.2	2.5	2.0	250	0.6	22760.0044
M 4	**16.5**	1.2	2.5	2.0	250	1.0	22760.0046
M 5	**6.0**	1.0	3.0	2.5	250	0.5	22760.0050
M 5	**8.5**	1.3	3.0	2.5	250	0.7	22760.0052
M 5	**12.5**	1.3	3.0	2.5	250	1.1	22760.0054
M 5	**20.5**	1.3	3.0	2.5	250	2.1	22760.0056
M 6	**6.0**	1.0	4.0	3.0	250	0.7	22760.0060
M 6	**11.5**	1.9	4.0	3.0	250	1.5	22760.0062
M 6	**17.5**	1.9	4.0	3.0	250	2.5	22760.0064
M 6	**26.5**	1.9	4.0	3.0	250	4.0	22760.0066
M 8	**8.0**	1.4	5.5	4.0	250	1.7	22760.0080
M 8	**12.0**	2.5	5.5	4.0	250	2.9	22760.0082
M 8	**22.0**	2.5	5.5	4.0	250	5.7	22760.0086
M 8	**32.0**	2.5	5.5	4.0	250	8.7	22760.0088

chanhvinh.com

Dimensions				WS	max.		Art. No.
d_1	l_1	l_2	d_2		[°C]	[g]	
[mm]				[mm]			
M10	**10.0**	1.5	7.0	5.0	250	3.4	22760.0100
M10	**14.0**	2.7	7.0	5.0	250	5.5	22760.0102
M10	**18.0**	2.7	7.0	5.0	250	6.7	22760.0104
M10	**27.0**	2.7	7.0	5.0	250	11.0	22760.0106
M10	**37.0**	2.7	7.0	5.0	250	16.0	22760.0108
M12	**12.0**	1.5	8.5	6.0	250	6.4	22760.0120
M12	**18.5**	3.4	8.5	6.0	250	10.0	22760.0122
M12	**22.5**	3.4	8.5	6.0	250	12.0	22760.0124
M12	**32.5**	3.4	8.5	6.0	250	19.0	22760.0126
M12	**42.5**	3.4	8.5	6.0	250	26.0	22760.0128
Stainless steel							
M 3	**5.0**	1.0	1.5	1.5	250	0.3	22760.0432
M 3	**7.5**	1.0	1.5	1.5	250	0.2	22760.0434
M 3	**10.0**	1.0	1.5	1.5	250	0.3	22760.0436
M 4	**6.5**	1.2	2.5	2.0	250	0.4	22760.0442
M 4	**10.5**	1.2	2.5	2.0	250	0.6	22760.0444
M 4	**16.5**	1.2	2.5	2.0	250	1.0	22760.0446
M 5	**8.5**	1.3	3.0	2.5	250	0.7	22760.0452
M 5	**12.5**	1.3	3.0	2.5	250	1.2	22760.0454
M 5	**20.5**	1.3	3.0	2.5	250	2.2	22760.0456
M 6	**11.5**	1.9	4.0	3.0	250	1.5	22760.0462
M 6	**17.5**	1.9	4.0	3.0	250	2.5	22760.0464
M 6	**26.5**	1.9	4.0	3.0	250	4.0	22760.0466
M 8	**12.0**	2.5	5.5	4.0	250	2.9	22760.0482
M 8	**22.0**	2.5	5.5	4.0	250	5.8	22760.0486
M 8	**32.0**	2.5	5.5	4.0	250	8.9	22760.0488
M10	**14.0**	2.7	7.0	5.0	250	5.8	22760.0502
M10	**18.0**	2.7	7.0	5.0	250	7.0	22760.0504
M10	**27.0**	2.7	7.0	5.0	250	11.0	22760.0506
M10	**37.0**	2.7	7.0	5.0	250	16.0	22760.0508
M12	**18.5**	3.4	8.5	6.0	250	11.0	22760.0522
M12	**22.5**	3.4	8.5	6.0	250	13.0	22760.0524
M12	**32.5**	3.4	8.5	6.0	250	20.0	22760.0526
M12	**42.5**	3.4	8.5	6.0	250	26.0	22760.0528

Application example

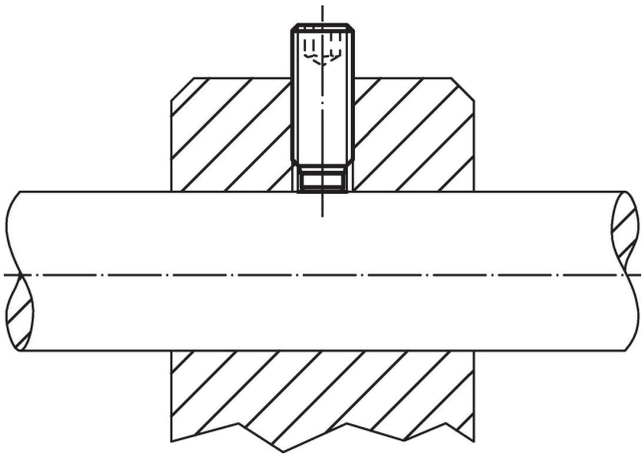

Compliance

For detailed compliance information please select the desired article number.