chanhvinh.com

Self-Aligning Pads • adjustable

EH 22740.



Product Description

Self-aligning pads are used as stop, support and thrust pad and are suitable for installation in clamping elements.

Material

Ball
- Ball-bearing steel, hardened, bright
- Stainless steel 1.3541, nickel-plated

Body
- Heat-treated steel, tempered, phosphated
- Stainless steel 1.4057, heat-treated

Nut
- Steel, blackened (ISO 4035)
- Stainless steel

More information

Notes

Ball protected against rotating.
Loading capacity valid for steel and stainless steel designs.
Customized design on request.

Drawing

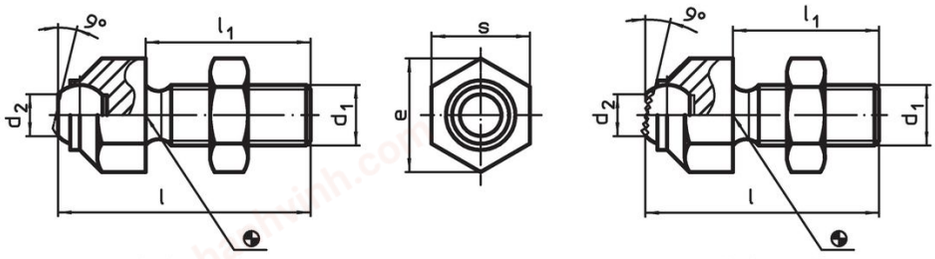

Order information

d_1	l	l_1	d_2	e	Ball diameter	Load capacity for static load max. [kN]	Tightening torque max. [Nm]	[g]	Art. No.
			Dimensions [mm]						
with flat-faced ball, bearing surface plain – picture 1, Heat-treated steel									
M 8	36.6	25	5.8	14.5	8.5	8	25	20	22740.0013
M10	45.7	30	8.6	19.0	12.0	8	46	45	22740.0016
M12	50.7	35	8.6	19.0	12.0	15	82	57	22740.0017
M16	60.7	40	10.5	27.0	16.0	25	206	131	22740.0024
M20	77.3	50	20.0	33.0	25.0	90	407	279	22740.0030
M24	100.0	70	20.0	40.0	25.0	90	698	472	22740.0036
M30 x 1,5	100.0	65	34.6	51.0	40.0	165	1355	919	22740.0046
with flat-faced ball, bearing surface plain – picture 1, Stainless steel									
M 8	36.6	25	5.8	14.5	8.5	8	25	17	22740.0113
M10	45.7	30	8.6	19.0	12.0	8	46	44	22740.0116
M12	50.7	35	8.6	19.0	12.0	15	82	57	22740.0117
M16	60.7	40	10.5	27.0	16.0	25	206	130	22740.0124
M20	77.3	50	20.0	33.0	25.0	90	407	273	22740.0130
M24	100.0	70	20.0	40.0	25.0	90	698	463	22740.0136
M30 x 1,5	100.0	65	34.6	51.0	40.0	165	1355	875	22740.0146
with flat-faced ball, bearing surface ribbed – picture 2, Heat-treated steel									
M 8	36.6	25	5.8	14.5	8.5	8	25	20	22740.0313
M10	45.7	30	8.6	19.0	12.0	8	46	44	22740.0316
M12	50.7	35	8.6	19.0	12.0	15	82	57	22740.0317
M16	60.7	40	10.5	27.0	16.0	25	206	131	22740.0324
M20	77.3	50	20.0	33.0	25.0	90	407	278	22740.0330
M24	100.0	70	20.0	40.0	25.0	90	698	471	22740.0336
M30 x 1,5	100.0	65	34.6	51.0	40.0	165	1355	918	22740.0346

chanhvinh.com

Application example

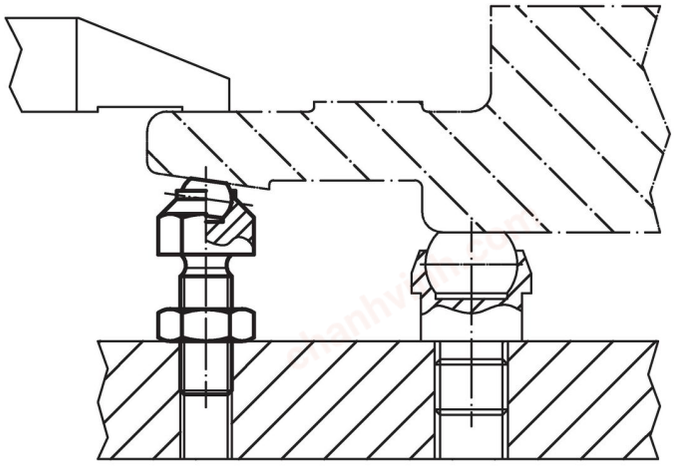

Compliance

For detailed compliance information please select the desired article number.