chanhvinh.com

Ball-Ended Thrust Screws • headless, short

EH 22720.



Product Description

Short, headless ball-ended thrust screws are used for clamping, tensioning and supporting components. They are particularly suitable for cylindrical shanks according to DIN 1835 E in combination with Whistle Notch or Weldon tool holders, for example.
The short design allows them to be used where screw penetration depth is limited and in compact assemblies.
The ball-ended thrust screw is screwed into the tool holder and acts with its flat-faced ball on the clamping surface of the cylindrical shank. The short design is specifically adapted to the installation conditions of the corresponding tool holders.
The moveable mounted flat-faced ball adapts to non-parallel contact surfaces and enables force transmission over a large area. The plain bearing surface distributes the applied force evenly across the contact area.
This product group offers the following features and advantages:

- Short, compact and headless design for limited installation space
- Specifically suitable for cylindrical shanks according to DIN 1835 E
- Suitable for use with Whistle Notch and Weldon tool holders
- Movable, flat-faced ball
- Compensates for non-parallel locating surfaces
- Smooth bearing surface for gentle force application
- Adjustment with a hexagon key

Material

Ball

- Ball-bearing steel, hardened

Screw

- Heat-treated steel, 1200 ±100 N/mm^2

More information

Notes

Ball not secured against rotating.
Customized design on request.

References

Thread lock on request.

Further products

- Ball-Ended Thrust Screws, headless, flat-faced ball

Drawing

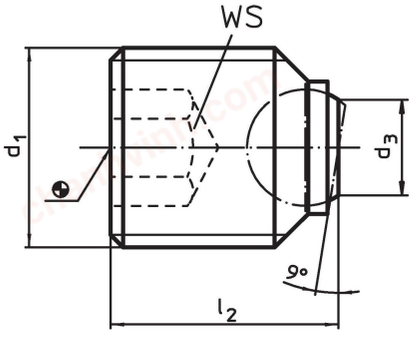

Order information

d_1	Dimensions l_2 [mm]	Dimensions d_3 [mm]	Ball diameter	WS [mm]	Load capacity for static load max. [kN]	[g]	Art. No.
flat-faced ball, bearing surface plain, for straight shanks DIN 1835 E							
M14	**16**	7.2	8.5	6	30	12	22720.0641
M16	**16**	7.2	8.5	8	30	15	22720.0660
M18 x 2	**20**	10.7	12.0	10	60	25	22720.0682
M20 x 2	**20**	10.7	12.0	10	60	33	22720.0692
M20 x 2	**25**	10.7	12.0	10	60	42	22720.0693
M24 x 2	**25**	13.5	15.0	12	90	60	22720.0730

chanhvinh.com

Application example

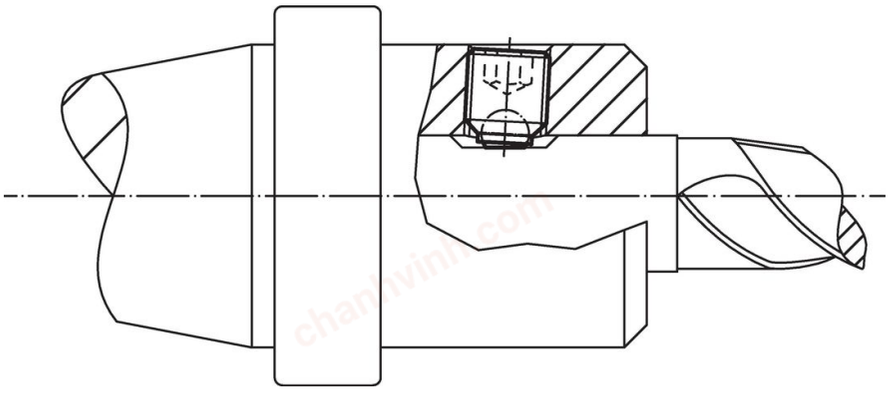

Compliance

RoHS-compliant
Contains lead – Compliant with Exemption 6(a)-I.

Contains SVHC substances >0,1% w/w
Contains lead - SVHC list [REACH] as of 04.02.2026.

SCIP-code
c8ebecd5-4fa0-4187-8026-5ed1b118fe88

Contains Proposition 65 substances

Lead can lead to cancer, developmental disorders, and reproductive damage in men and to reproductive damage in women from exposure. https://www.P65Warnings.ca.gov/

Free from Conflict Minerals
This product does not contain any substances designated as "conflict minerals" such as tantalum, tin, gold or tungsten from the Democratic Republic of Congo or adjacent countries.

POP-compliant
Contains no persistent organic pollutants – Stockholm Convention [POP] as of September 2025.

PFAS-compliant
Contains no per- and polyfluoroalkyl substances (PFAS).

TSCA-compliant
Agent concentration in this product does not exceed the specified threshold.