chanhvinh.com

Ball-Ended Thrust Screws • headed, round ball

EH 22710.



Product Description

Ball-ended thrust screws, headed, round ball are used for positioning, clamping, securing and supporting components. They are particularly suitable for applications requiring point contact and concentrated force transmission.
The head acts as a stop that limits the screw penetration depth. This helps ensure a defined and reproducible installation position of the ball-ended thrust screw.
The fully spherical ball provides point contact with the component and transmits the applied force in a concentrated manner to the locating surface. The spherical contact surface also allows inclined or non-parallel locating surfaces to be positioned, clamped, tensioned or supported.
This product group offers the following features and advantages:

- Head acts as a stop to limit the screw penetration depth
- Defined and repeatable installation position
- Fully spherical ball for point force transmission
- Suitable for inclined or non-parallel locating surfaces
- Targeted force application over a small contact area
- Adjustment with a hexagon key
- Versions in steel or stainless steel

Material

Ball

- Ball-bearing steel, hardened
- Stainless steel, hardened

Screw

- Heat-treated steel, 1200 ±100 N/mm^2
- Stainless steel 1.4305

More information

Notes

Customized design on request.

References

Thread lock on request.

Drawing

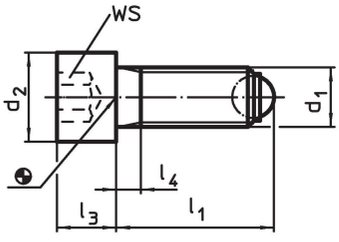

Order information

d_1	l_1 ~	d_2	l_3	l_4	Ball diameter	WS	Load capacity for static load[1] max.		Art. No.
	Dimensions [mm]					[mm]	[kN]	[g]	
round ball, Heat-treated steel									
M 6	**20.8**	10	6	3.0	4.0	5	9	6.1	22710.0062
M 6	**30.8**	10	6	3.0	4.0	5	9	7.8	22710.0064
M 6	**40.8**	10	6	16.0	4.0	5	9	9.9	22710.0066
M 8	**21.2**	13	8	3.5	5.5	6	15	13.0	22710.0082
M 8	**36.2**	13	8	3.5	5.5	6	15	17.0	22710.0084
M 8	**51.2**	13	8	22.0	5.5	6	15	23.0	22710.0086
M10	**26.7**	16	10	4.5	7.0	8	20	24.0	22710.0102
M10	**41.7**	16	10	4.5	7.0	8	20	31.0	22710.0104
M10	**61.7**	16	10	28.0	7.0	8	20	44.0	22710.0106
M12	**32.0**	18	12	5.0	8.5	10	30	39.0	22710.0122
M12	**52.0**	18	12	5.0	8.5	10	30	53.0	22710.0124
M12	**82.0**	18	12	44.0	8.5	10	30	80.0	22710.0126
M16	**43.3**	24	16	6.0	12.0	14	60	95.0	22710.0162
M16	**63.3**	24	16	6.0	12.0	14	60	122.0	22710.0164
M16	**83.3**	24	16	36.0	12.0	14	60	155.0	22710.0166
M20	**54.2**	30	20	7.5	15.0	17	90	189.0	22710.0202

[1] Statements on load capacity are not valid for the stainless steel type.

chanhvinh.com

Dimensions						WS	Load capacity for static load[1] max.		Art. No.
d_1	l_1 ~	d_2	l_3	l_4	Ball diameter				
[mm]						[mm]	[kN]	[g]	
M20	**84.2**	30	20	28.0	15.0	17	90	255.0	22710.0204
M20	**104.2**	30	20	48.0	15.0	17	90	306.0	22710.0206
M24	**64.7**	36	24	9.0	18.0	19	120	325.0	22710.0242
M24	**94.7**	36	24	30.0	18.0	19	120	425.0	22710.0244
M24	**124.7**	36	24	60.0	18.0	19	120	533.0	22710.0246
round ball, Stainless steel									
M 6	**20.8**	10	6	3.0	4.0	5	9	6.1	22710.0752
M 6	**30.8**	10	6	3.0	4.0	5	9	7.8	22710.0754
M 6	**40.8**	10	6	16.0	4.0	5	9	10.0	22710.0756
M 8	**21.2**	13	8	3.5	5.5	6	15	13.0	22710.0762
M 8	**36.2**	13	8	3.5	5.5	6	15	17.0	22710.0764
M 8	**51.2**	13	8	22.0	5.5	6	15	23.0	22710.0766
M10	**26.7**	16	10	4.5	7.0	8	20	24.0	22710.0772
M10	**41.7**	16	10	4.5	7.0	8	20	32.0	22710.0774
M10	**61.7**	16	10	28.0	7.0	8	20	44.0	22710.0776
M12	**32.0**	18	12	5.0	8.5	10	30	39.0	22710.0782
M12	**52.0**	18	12	5.0	8.5	10	30	53.0	22710.0784
M12	**82.0**	18	12	44.0	8.5	10	30	81.0	22710.0786
M16	**43.3**	24	16	6.0	12.0	14	60	95.0	22710.0792
M16	**63.3**	24	16	6.0	12.0	14	60	121.0	22710.0794
M16	**83.3**	24	16	36.0	12.0	14	60	155.0	22710.0796

[1] Statements on load capacity are not valid for the stainless steel type.

Application example

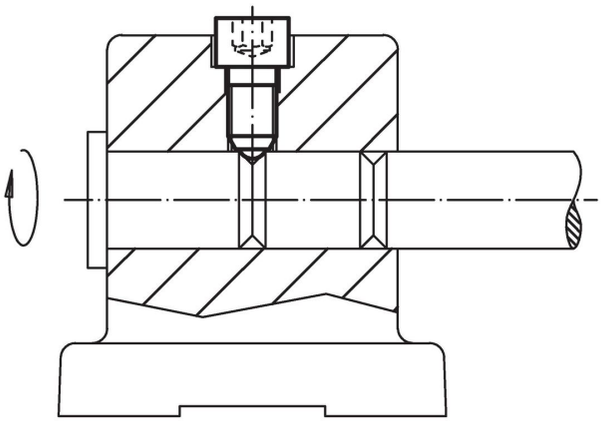

chanhvinh.com

Compliance

RoHS-compliant
Compliant with Directive 2011/65/EU [RoHS].

Does not contain SVHC substances
No SVHC substances with more than 0.1% w/w contained - SVHC list [REACH] as of 04.02.2026.

SCIP-code
N/A

Does not contain Proposition 65 substances
No Proposition 65 substances included.
https://www.P65Warnings.ca.gov/

Free from Conflict Minerals
This product does not contain any substances designated as "conflict minerals" such as tantalum, tin, gold or tungsten from the Democratic Republic of Congo or adjacent countries.

POP-compliant
Contains no persistent organic pollutants – Stockholm Convention [POP] as of September 2025.

PFAS-compliant
Contains no per- and polyfluoroalkyl substances (PFAS).

TSCA-compliant
Agent concentration in this product does not exceed the specified threshold.