chanhvinh.com



# **Ball-Ended Thrust Screws** • headless, ball protected against rotating
EH 22700.



## Product Description

Ball-ended thrust screws headless, ball protected against rotation, flattened ball are used for positioning, clamping, securing and supporting components. They are particularly suitable for applications where the orientation of the ball's contact surface must be maintained during installation.
The headless design allows a variable screw penetration depth and space-saving integration into the assembly.
The movable, flat-faced ball can tilt by up to 9°. This allows it to adapt to non-parallel or inclined locating surfaces and distribute force over a larger surface area. The anti-turn locking device maintains the orientation of the bearing surface during assembly.
The smooth bearing surface allows even and gentle force application to the component. The ribbed bearing surface provides increased grip and helps prevent lateral movement of the component.
This product group offers the following features and advantages:

- Compact headless design
- Variable screw penetration depth
- Space-saving integration into the assembly
- Movable, flat-faced ball
- Ball tilt of up to 9°
- Compensates for non-parallel or inclined locating surfaces
- Even force transmission over a larger surface area
- Ball with anti-turn locking device for easier assembly
- Smooth bearing surface for gentle force application
- Ribbed bearing surface for increased grip
- Adjustment with a hexagon key
- Versions in steel or stainless steel

### Material

**Ball**

- Ball-bearing steel, hardened
- Stainless steel, hardened

**Screw**

- Heat-treated steel, 1200 ±100 N/mm$^2$
- Stainless steel 1.4305

### More information

#### Notes

Ball protected against rotating.
Customized design on request.

#### References

Thread lock on request.

#### Further products

- Ball-Ended Thrust Screws, headless, flat-faced ball
- Ball-Ended Thrust Screws, headless, with fine-pitch thread
- Ball-Ended Thrust Screws, headless, flat-faced ball and hexalobular socket

## Drawing

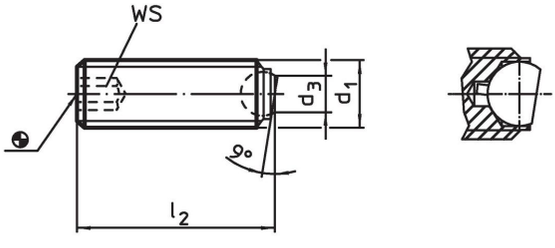

chanhvinh.com



## Order information

| Dimensions $d_1$ | $l_2$ | $d_3$ | Ball diameter | WS | Load capacity for static load[1] max. | | Art. No. |
|---|---|---|---|---|---|---|---|
| | | [mm] | | [mm] | [kN] | [g] | |
| **flat-faced ball, bearing surface plain, Heat-treated steel** | | | | | | | |
| **M 6** | **12** | 3.2 | 4.0 | 3 | 6 | 1.6 | 22700.0563 |
| **M 6** | **16** | 3.2 | 4.0 | 3 | 6 | 2.3 | 22700.0564 |
| **M 6** | **20** | 3.2 | 4.0 | 3 | 6 | 3.0 | 22700.0565 |
| **M 6** | **25** | 3.2 | 4.0 | 3 | 6 | 3.8 | 22700.0566 |
| **M 8** | **16** | 4.5 | 5.5 | 4 | 9 | 3.9 | 22700.0583 |
| **M 8** | **20** | 4.5 | 5.5 | 4 | 9 | 5.1 | 22700.0584 |
| **M 8** | **25** | 4.5 | 5.5 | 4 | 9 | 6.7 | 22700.0585 |
| **M 8** | **30** | 4.5 | 5.5 | 4 | 9 | 8.2 | 22700.0586 |
| **M10** | **20** | 6.0 | 7.0 | 5 | 12 | 8.0 | 22700.0603 |
| **M10** | **25** | 6.0 | 7.0 | 5 | 12 | 10.0 | 22700.0604 |
| **M10** | **35** | 6.0 | 7.0 | 5 | 12 | 15.0 | 22700.0606 |
| **M10** | **40** | 6.0 | 7.0 | 5 | 12 | 17.0 | 22700.0608 |
| **M12** | **20** | 7.2 | 8.5 | 6 | 18 | 11.0 | 22700.0622 |
| **M12** | **30** | 7.2 | 8.5 | 6 | 18 | 18.0 | 22700.0624 |
| **M12** | **40** | 7.2 | 8.5 | 6 | 18 | 25.0 | 22700.0626 |
| **M12** | **50** | 7.2 | 8.5 | 6 | 18 | 32.0 | 22700.0628 |
| **M16** | **20** | 10.7 | 12.0 | 8 | 36 | 22.0 | 22700.0661 |
| **M16** | **25** | 10.7 | 12.0 | 8 | 36 | 29.0 | 22700.0662 |
| **M16** | **35** | 10.7 | 12.0 | 8 | 36 | 41.0 | 22700.0664 |
| **M16** | **50** | 10.7 | 12.0 | 8 | 36 | 60.0 | 22700.0666 |
| **M20** | **30** | 13.5 | 15.0 | 10 | 60 | 53.0 | 22700.0672 |
| **M20** | **40** | 13.5 | 15.0 | 10 | 60 | 70.0 | 22700.0674 |
| **M20** | **50** | 13.5 | 15.0 | 10 | 60 | 91.0 | 22700.0675 |
| **M20** | **60** | 13.5 | 15.0 | 10 | 60 | 111.0 | 22700.0676 |
| **M24** | **35** | 15.8 | 18.0 | 12 | 80 | 88.0 | 22700.0682 |
| **M24** | **50** | 15.8 | 18.0 | 12 | 80 | 127.0 | 22700.0684 |
| **M24** | **80** | 15.8 | 18.0 | 12 | 80 | 216.0 | 22700.0686 |
| **flat-faced ball, bearing surface plain, Stainless steel** | | | | | | | |
| **M 6** | **12** | 3.2 | 4.0 | 3 | 6 | 1.6 | 22700.0803 |
| **M 6** | **16** | 3.2 | 4.0 | 3 | 6 | 2.3 | 22700.0804 |
| **M 6** | **20** | 3.2 | 4.0 | 3 | 6 | 2.9 | 22700.0805 |
| **M 6** | **25** | 3.2 | 4.0 | 3 | 6 | 3.8 | 22700.0806 |
| **M 8** | **16** | 4.5 | 5.5 | 4 | 9 | 3.9 | 22700.0813 |
| **M 8** | **20** | 4.5 | 5.5 | 4 | 9 | 5.2 | 22700.0814 |
| **M 8** | **25** | 4.5 | 5.5 | 4 | 9 | 6.7 | 22700.0815 |
| **M 8** | **30** | 4.5 | 5.5 | 4 | 9 | 8.3 | 22700.0816 |
| **M10** | **20** | 6.0 | 7.0 | 5 | 12 | 8.1 | 22700.0823 |
| **M10** | **25** | 6.0 | 7.0 | 5 | 12 | 10.0 | 22700.0824 |
| **M10** | **35** | 6.0 | 7.0 | 5 | 12 | 15.0 | 22700.0826 |
| **M10** | **40** | 6.0 | 7.0 | 5 | 12 | 18.0 | 22700.0828 |
| **M12** | **20** | 7.2 | 8.5 | 6 | 18 | 11.0 | 22700.0832 |
| **M12** | **30** | 7.2 | 8.5 | 6 | 18 | 18.0 | 22700.0834 |
| **M12** | **40** | 7.2 | 8.5 | 6 | 18 | 25.0 | 22700.0836 |
| **M12** | **50** | 7.2 | 8.5 | 6 | 18 | 32.0 | 22700.0838 |
| **M16** | **20** | 10.7 | 12.0 | 8 | 36 | 23.0 | 22700.0841 |
| **M16** | **25** | 10.7 | 12.0 | 8 | 36 | 29.0 | 22700.0842 |
| **M16** | **35** | 10.7 | 12.0 | 8 | 36 | 40.0 | 22700.0844 |
| **M16** | **50** | 10.7 | 12.0 | 8 | 36 | 60.0 | 22700.0846 |
| **flat-faced ball, bearing surface ribbed, Heat-treated steel** | | | | | | | |
| **M 8** | **16** | 4.5 | 5.5 | 4 | 9 | 3.9 | 22700.0693 |
| **M 8** | **20** | 4.5 | 5.5 | 4 | 9 | 5.2 | 22700.0694 |
| **M 8** | **25** | 4.5 | 5.5 | 4 | 9 | 6.6 | 22700.0695 |
| **M 8** | **30** | 4.5 | 5.5 | 4 | 9 | 8.2 | 22700.0696 |
| **M10** | **20** | 6.0 | 7.0 | 5 | 12 | 8.0 | 22700.0703 |
| **M10** | **25** | 6.0 | 7.0 | 5 | 12 | 10.0 | 22700.0704 |
| **M10** | **35** | 6.0 | 7.0 | 5 | 12 | 15.0 | 22700.0706 |

[1] Statements on load capacity are not valid for the stainless steel type.

chanhvinh.com



| Dimensions $d_1$ | $l_2$ | $d_3$ | Ball diameter | WS | Load capacity for static load[1] max. | | Art. No. |
|---|---|---|---|---|---|---|---|
| [mm] | | | | [mm] | [kN] | [g] | |
| **M10** | **40** | 6.0 | 7.0 | 5 | 12 | 17.0 | 22700.0708 |
| **M12** | **20** | 7.2 | 8.5 | 6 | 18 | 11.0 | 22700.0722 |
| **M12** | **30** | 7.2 | 8.5 | 6 | 18 | 18.0 | 22700.0724 |
| **M12** | **40** | 7.2 | 8.5 | 6 | 18 | 24.0 | 22700.0726 |
| **M12** | **50** | 7.2 | 8.5 | 6 | 18 | 32.0 | 22700.0728 |
| **M16** | **20** | 10.7 | 12.0 | 8 | 36 | 23.0 | 22700.0761 |
| **M16** | **25** | 10.7 | 12.0 | 8 | 36 | 27.0 | 22700.0762 |
| **M16** | **35** | 10.7 | 12.0 | 8 | 36 | 41.0 | 22700.0764 |
| **M16** | **50** | 10.7 | 12.0 | 8 | 36 | 61.0 | 22700.0766 |
| **M20** | **30** | 13.5 | 15.0 | 10 | 60 | 53.0 | 22700.0772 |
| **M20** | **40** | 13.5 | 15.0 | 10 | 60 | 70.0 | 22700.0774 |
| **M20** | **50** | 13.5 | 15.0 | 10 | 60 | 91.0 | 22700.0775 |
| **M20** | **60** | 13.5 | 15.0 | 10 | 60 | 111.0 | 22700.0776 |
| **M24** | **35** | 15.8 | 18.0 | 12 | 80 | 85.0 | 22700.0782 |
| **M24** | **50** | 15.8 | 18.0 | 12 | 80 | 126.0 | 22700.0784 |
| **M24** | **80** | 15.8 | 18.0 | 12 | 80 | 215.0 | 22700.0786 |

[1] Statements on load capacity are not valid for the stainless steel type.

## Application example

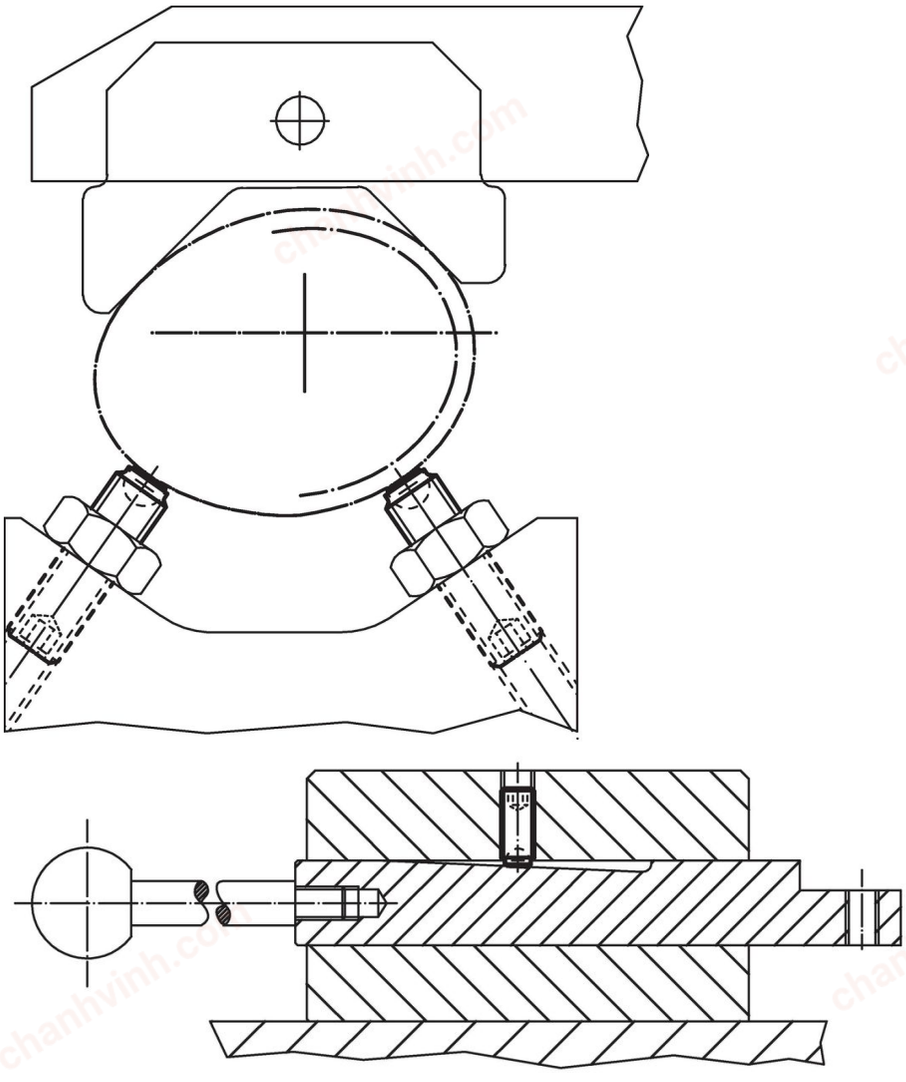

## Compliance

For detailed compliance information please select the desired article number.