chanhvinh.com

Ball-Ended Thrust Screws • headed, ball protected against rotating

EH 22700.



Product Description

Ball-Ended Thrust Screws headed, ball protected against rotating, flattened ball are used for positioning, clamping, securing and supporting components. They are particularly suitable for applications where the orientation of the ball's contact surface must be maintained during installation.
The head acts as a stop that limits the screw penetration depth. This helps ensure a defined installation position of the ball-ended thrust screw.
The movable, flat-faced ball can tilt by up to 9°. This allows it to adapt to non-parallel or inclined locating surfaces and distribute force over a larger surface area. The anti-turn locking device maintains the orientation of the bearing surface during assembly.
The smooth bearing surface allows even and gentle force application to the component. The ribbed bearing surface provides increased grip and helps prevent lateral movement of the component.
This product group offers the following features and advantages:

- Head acts as a stop to limit the screw penetration depth
- Defined and repeatable installation position
- Movable, flat-faced ball
- Ball tilt of up to 9°
- Compensates for non-parallel or inclined locating surfaces
- Even force transmission over a larger surface area
- Ball with anti-turn locking device for easier assembly
- Smooth bearing surface for gentle force application
- Ribbed bearing surface for increased grip
- Adjustment with a hexagon key
- Versions in steel or stainless steel

Material

Ball

- Ball-bearing steel, hardened
- Stainless steel, hardened

Screw

- Heat-treated steel, 1200 ±100 N/mm^2
- Stainless steel 1.4305

More information

Notes

Note: Thread runout l_4 !
Ball protected against rotating.
Customized design on request.

References

Thread lock on request.

Further products

- Ball-Ended Thrust Screws, headed, flat-faced ball

Drawing

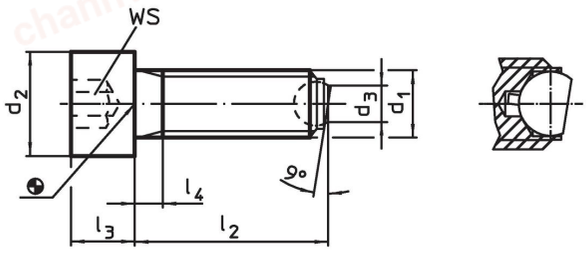

Order information

d_1	l_2 ~	d_2	d_3	l_3	l_4	Ball diameter	WS	Load capacity for static load[1] max.		Art. No.
[mm]							[mm]	[kN]	[g]	
flat-faced ball, bearing surface plain, Heat-treated steel										
M 6	**20**	10	3.2	6	3.0	4.0	5	6	6.0	22700.0062
M 6	**30**	10	3.2	6	3.0	4.0	5	6	7.7	22700.0064
M 6	**40**	10	3.2	6	16.0	4.0	5	6	9.9	22700.0066
M 8	**20**	13	4.5	8	3.5	5.5	6	9	12.0	22700.0082
M 8	**35**	13	4.5	8	3.5	5.5	6	9	17.0	22700.0084

[1] Statements on load capacity are not valid for the stainless steel type.

chanhvinh.com

Dimensions							WS	Load capacity for static load[1] max.		Art. No.
d_1	l_2 ~	d_2	d_3	l_3	l_4	Ball diameter				
[mm]							[mm]	[kN]	[g]	
M 8	**50**	13	4.5	8	22.0	5.5	6	9	23.0	22700.0086
M10	**25**	16	6.0	10	4.5	7.0	8	12	24.0	22700.0102
M10	**40**	16	6.0	10	4.5	7.0	8	12	31.0	22700.0104
M10	**60**	16	6.0	10	28.0	7.0	8	12	44.0	22700.0106
M12	**30**	18	7.2	12	5.0	8.5	10	18	38.0	22700.0122
M12	**50**	18	7.2	12	5.0	8.5	10	18	52.0	22700.0124
M12	**80**	18	7.2	12	44.0	8.5	10	18	79.0	22700.0126
M16	**40**	24	10.7	16	6.0	12.0	14	36	93.0	22700.0162
M16	**60**	24	10.7	16	6.0	12.0	14	36	120.0	22700.0164
M16	**80**	24	10.7	16	36.0	12.0	14	36	154.0	22700.0166
M20	**50**	30	13.5	20	7.5	15.0	17	60	185.0	22700.0172
M20	**80**	30	13.5	20	28.0	15.0	17	60	253.0	22700.0174
M20	**100**	30	13.5	20	48.0	15.0	17	60	301.0	22700.0176
M24	**60**	36	15.8	24	9.0	18.0	19	80	322.0	22700.0182
M24	**90**	36	15.8	24	30.0	18.0	19	80	422.0	22700.0184
M24	**120**	36	15.8	24	60.0	18.0	19	80	528.0	22700.0186
flat-faced ball, bearing surface plain, Stainless steel										
M 6	**20**	10	3.2	6	3.0	4.0	5	6	6.1	22700.0302
M 6	**30**	10	3.2	6	3.0	4.0	5	6	7.9	22700.0304
M 6	**40**	10	3.2	6	16.0	4.0	5	6	10.0	22700.0306
M 8	**20**	13	4.5	8	3.5	5.5	6	9	13.0	22700.0312
M 8	**35**	13	4.5	8	3.5	5.5	6	9	17.0	22700.0314
M 8	**50**	13	4.5	8	22.0	5.5	6	9	24.0	22700.0316
M10	**25**	16	6.0	10	4.5	7.0	8	12	24.0	22700.0322
M10	**40**	16	6.0	10	4.5	7.0	8	12	32.0	22700.0324
M10	**60**	16	6.0	10	28.0	7.0	8	12	44.0	22700.0326
M12	**30**	18	7.2	12	5.0	8.5	10	18	39.0	22700.0332
M12	**50**	18	7.2	12	5.0	8.5	10	18	53.0	22700.0334
M12	**80**	18	7.2	12	44.0	8.5	10	18	79.0	22700.0336
M16	**40**	24	10.7	16	6.0	12.0	14	36	94.0	22700.0342
M16	**60**	24	10.7	16	6.0	12.0	14	36	121.0	22700.0344
M16	**80**	24	10.7	16	36.0	12.0	14	36	156.0	22700.0346
flat-faced ball, bearing surface ribbed, Heat-treated steel										
M 8	**20**	13	4.5	8	3.5	5.5	6	9	13.0	22700.0192
M 8	**35**	13	4.5	8	3.5	5.5	6	9	17.0	22700.0194
M 8	**50**	13	4.5	8	22.0	5.5	6	9	23.0	22700.0196
M10	**25**	16	6.0	10	4.5	7.0	8	12	24.0	22700.0202
M10	**40**	16	6.0	10	4.5	7.0	8	12	31.0	22700.0204
M10	**60**	16	6.0	10	28.0	7.0	8	12	43.0	22700.0206
M12	**30**	18	7.2	12	5.0	8.5	10	18	38.0	22700.0222
M12	**50**	18	7.2	12	5.0	8.5	10	18	52.0	22700.0224
M12	**80**	18	7.2	12	44.0	8.5	10	18	79.0	22700.0226
M16	**40**	24	10.7	16	6.0	12.0	14	36	93.0	22700.0262
M16	**60**	24	10.7	16	6.0	12.0	14	36	120.0	22700.0264
M16	**80**	24	10.7	16	36.0	12.0	14	36	153.0	22700.0266
M20	**50**	30	13.5	20	7.5	15.0	17	60	213.0	22700.0272
M20	**80**	30	13.5	20	28.0	15.0	17	60	252.0	22700.0274
M20	**100**	30	13.5	20	48.0	15.0	17	60	301.0	22700.0276
M24	**60**	36	15.8	24	9.0	18.0	19	80	323.0	22700.0282
M24	**90**	36	15.8	24	30.0	18.0	19	80	422.0	22700.0284
M24	**120**	36	15.8	24	60.0	18.0	19	80	535.0	22700.0286

[1] Statements on load capacity are not valid for the stainless steel type.

chanhvinh.com

Application example

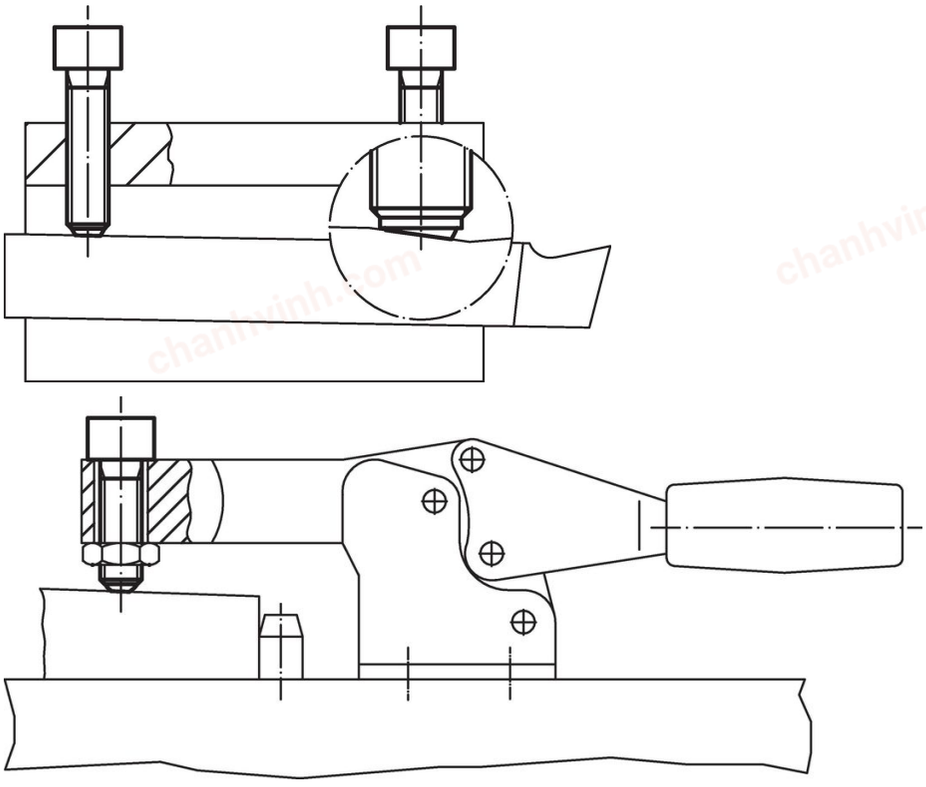

Compliance

RoHS-compliant
Compliant with Directive 2011/65/EU [RoHS].

Does not contain SVHC substances
No SVHC substances with more than 0.1% w/w contained - SVHC list [REACH] as of 04.02.2026.

SCIP-code
N/A

Does not contain Proposition 65 substances
No Proposition 65 substances included.
https://www.P65Warnings.ca.gov/

Free from Conflict Minerals
This product does not contain any substances designated as "conflict minerals" such as tantalum, tin, gold or tungsten from the Democratic Republic of Congo or adjacent countries.

POP-compliant
Contains no persistent organic pollutants – Stockholm Convention [POP] as of September 2025.

PFAS-compliant
Contains no per- and polyfluoroalkyl substances (PFAS).

TSCA-compliant
Agent concentration in this product does not exceed the specified threshold.