chanhvinh.com

Seating Pins • pin shape
EH 22680.



Product Description

To be used as solid and precise seat and stop. The pin-shaped form of this seating pin allows an application in components with narrow seating points.
Bearing surface induction hardened and grounded.

Material

- Heat-treated steel, tempered, blackened

Drawing

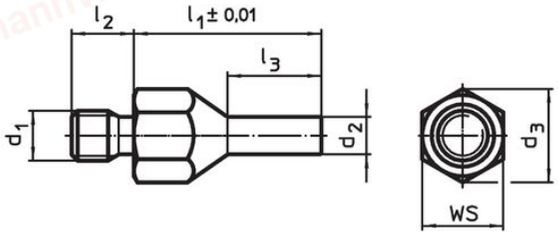

picture 1

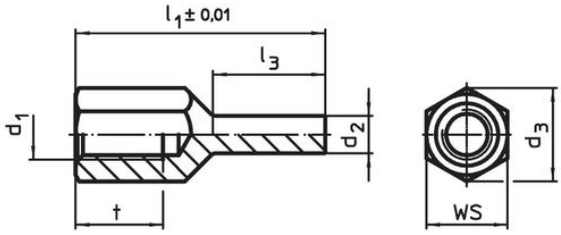

picture 2

Order information

l_1 ±0.01	d_1	d_2	l_2	l_3	t	d_3	WS	Tightening torque max.		Art. No.
[mm]							[mm]	[Nm]	[g]	
with male thread – picture 1										
20	**M 6**	**4**	8	10.0	–	11.0	10	7	7.7	22680.0402
30	**M 6**	**4**	8	15.0	–	11.0	10	7	12.0	22680.0404
30	**M 8**	**4**	10	15.0	–	14.4	13	18	17.0	22680.0412
40	**M 8**	**4**	10	20.0	–	14.4	13	18	23.0	22680.0414
30	**M 8**	**6**	10	15.0	–	14.4	13	18	20.0	22680.0416
40	**M 8**	**6**	10	20.0	–	14.4	13	18	30.0	22680.0418
30	**M10**	**6**	14	15.0	–	19.0	17	32	30.0	22680.0422
50	**M10**	**6**	14	25.0	–	19.0	17	32	51.0	22680.0424
30	**M10**	**8**	14	15.0	–	19.0	17	32	11.0	22680.0426
50	**M10**	**8**	14	25.0	–	19.0	17	32	58.0	22680.0428
40	**M12**	**6**	14	20.0	–	21.2	19	60	48.0	22680.0432
60	**M12**	**6**	14	30.0	–	21.2	19	60	75.0	22680.0434
40	**M12**	**8**	14	20.0	–	21.2	19	60	56.0	22680.0436
60	**M12**	**8**	14	30.0	–	21.2	19	60	83.0	22680.0438
with female thread – picture 2										
20	**M 6**	**4**	–	8.5	6	11.0	10	7	5.7	22680.0452
30	**M 6**	**4**	–	13.5	9	11.0	10	7	8.9	22680.0454
30	**M 8**	**4**	–	13.0	10	14.4	13	18	13.0	22680.0462
40	**M 8**	**4**	–	18.0	14	14.4	13	18	18.0	22680.0464
30	**M 8**	**6**	–	13.0	10	14.4	13	18	16.0	22680.0466
40	**M 8**	**6**	–	18.0	14	14.4	13	18	21.0	22680.0468
30	**M10**	**6**	–	12.0	10	19.0	17	32	24.0	22680.0472
50	**M10**	**6**	–	25.0	15	19.0	17	32	38.0	22680.0474
30	**M10**	**8**	–	12.0	10	19.0	17	32	28.0	22680.0476
50	**M10**	**8**	–	25.0	15	19.0	17	32	44.0	22680.0478

chanhvinh.com

Dimensions							WS	Tightening torque max.		Art. No.
l_1 ±0.01	d_1	d_2	l_2	l_3	t	d_3				
[mm]							[mm]	[Nm]	[g]	
40	**M12**	**6**	–	18.0	12	21.2	19	60	36.0	22680.0482
60	**M12**	**6**	–	28.0	18	21.2	19	60	56.0	22680.0484
40	**M12**	**8**	–	18.0	12	21.2	19	60	41.0	22680.0486
60	**M12**	**8**	–	28.0	18	21.2	19	60	63.0	22680.0488

Application example

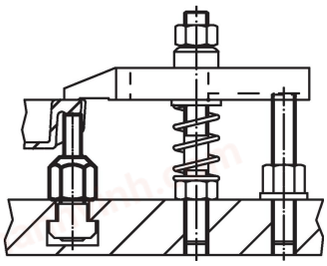

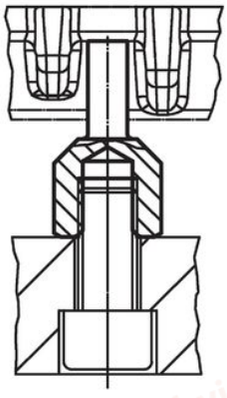

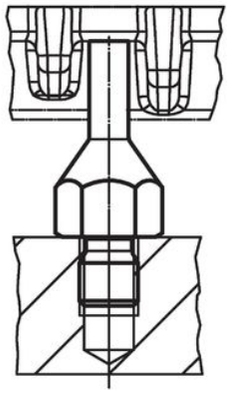

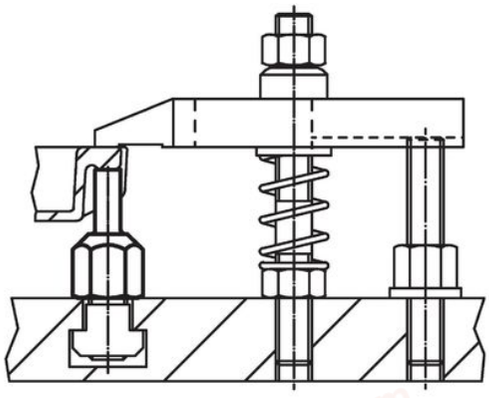

Compliance

For detailed compliance information please select the desired article number.