chanhvinh.com

Locating Pins • bolt-on, similar to DIN 6321

EH 22630.



Product Description

Cylindric locating pins for locating workpieces in toleranced holes and also to be used as stops and feet.
Flattened locating pins used to overcome differences in tolerances, between holes or to position an element in one direction only.
Apart from size 6 additional safety by fastening possibilities from up and down (can be used also for dismounting). The outer dimensions are similar to DIN 6321.

Material

- Case-hardened steel, case-hardened, blackened and ground

More information

Further products

- Locating Pins, DIN 6321
- Locating Pins, with ball end
- Locating Pins, with ball end, stepped

Drawing

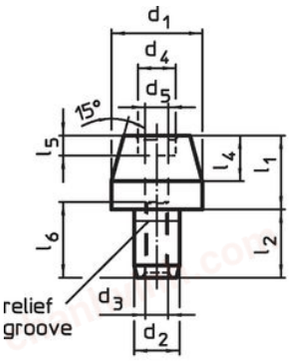

picture 1

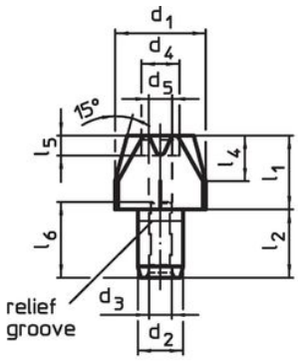

picture 2



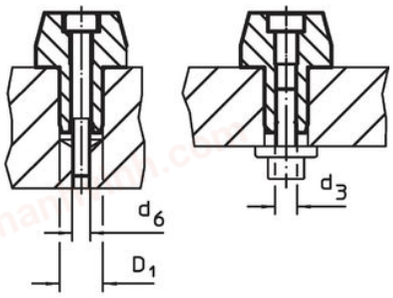

Order information

Dimensions												Location hole		Art. No.
d_1 g6	l_1	b	d_2 k6	l_2	d_3	d_4	l_4	d_5	l_5	d_6	l_6	D_1 H7		
[mm]												[mm]	[g]	
locating pin, cylindric, bolt-on – picture 1														
6	**7**	–	4	6	–	–	4	2.1	–	M 2	–	4	1.4	22630.0220[1)]
6	**12**	–	4	6	–	–	4	2.1	–	M 2	–	4	2.9	22630.0221[1)]
8	**10**	–	6	9	M3	–	6	2.6	–	M2,5	10	6	3.9	22630.0222
8	**16**	–	6	9	M3	–	6	2.6	–	M2,5	10	6	6.4	22630.0223
10	**10**	–	6	9	M3	5.0	6	2.6	2.6	M2,5	10	6	6.1	22630.0224
10	**18**	–	6	9	M3	5.0	6	2.6	2.6	M2,5	10	6	10.0	22630.0225
12	**10**	–	6	9	M3	5.0	6	2.6	2.6	M2,5	10	6	8.0	22630.0226
12	**18**	–	6	9	M3	5.0	6	2.6	2.6	M2,5	10	6	15.0	22630.0227
16	**13**	–	8	12	M4	6.5	8	3.3	3.1	M 3	13	8	19.0	22630.0228
16	**22**	–	8	12	M4	6.5	8	3.3	3.1	M 3	13	8	32.0	22630.0229
20	**15**	–	12	18	M6	10.0	9	5.2	5.1	M 5	19	12	46.0	22630.0230
20	**25**	–	12	18	M6	10.0	9	5.2	5.1	M 5	19	12	60.0	22630.0231
25	**15**	–	12	18	M6	10.0	9	5.2	5.1	M 5	19	12	59.0	22630.0232
25	**25**	–	12	18	M6	10.0	9	5.2	5.1	M 5	19	12	96.0	22630.0233
locating pin, flattened, bolt-on – picture 2														
6	**7**	1.0	4	6	–	–	4	2.1	–	M 2	–	4	1.0	22630.0240[1)]
6	**12**	1.0	4	6	–	–	4	2.1	–	M 2	–	4	1.5	22630.0241[1)]
8	**10**	1.6	6	9	M3	–	6	2.6	–	M2,5	10	6	3.4	22630.0242
8	**16**	1.6	6	9	M3	–	6	2.6	–	M2,5	10	6	4.4	22630.0243

[1)] bolt-on from the top only.

chanhvinh.com

Dimensions												Location hole		Art. No.
d_1 g6	l_1	b	d_2 k6	l_2	d_3	d_4	l_4	d_5	l_5	d_6	l_6	D_1 H7		
[mm]												[mm]	[g]	
10	**10**	2.5	6	9	M3	5.0	6	2.6	2.6	M2,5	10	6	4.6	22630.0244
10	**18**	2.5	6	9	M3	5.0	6	2.6	2.6	M2,5	10	6	7.3	22630.0245
12	**10**	2.5	6	9	M3	5.0	6	2.6	2.6	M2,5	10	6	5.8	22630.0246
12	**18**	2.5	6	9	M3	5.0	6	2.6	2.6	M2,5	10	6	10.0	22630.0247
16	**13**	3.5	8	12	M4	6.5	8	3.3	3.1	M 3	13	8	14.0	22630.0248
16	**22**	3.5	8	12	M4	6.5	8	3.3	3.1	M 3	13	8	22.0	22630.0249
20	**15**	5.0	12	18	M6	10.0	9	5.2	5.1	M 5	19	12	30.0	22630.0250
20	**25**	5.0	12	18	M6	10.0	9	5.2	5.1	M 5	19	12	44.0	22630.0251
25	**15**	5.0	12	18	M6	10.0	9	5.2	5.1	M 5	19	12	41.0	22630.0252
25	**25**	5.0	12	18	M6	10.0	9	5.2	5.1	M 5	19	12	62.0	22630.0253

[1] bolt-on from the top only.

Application example

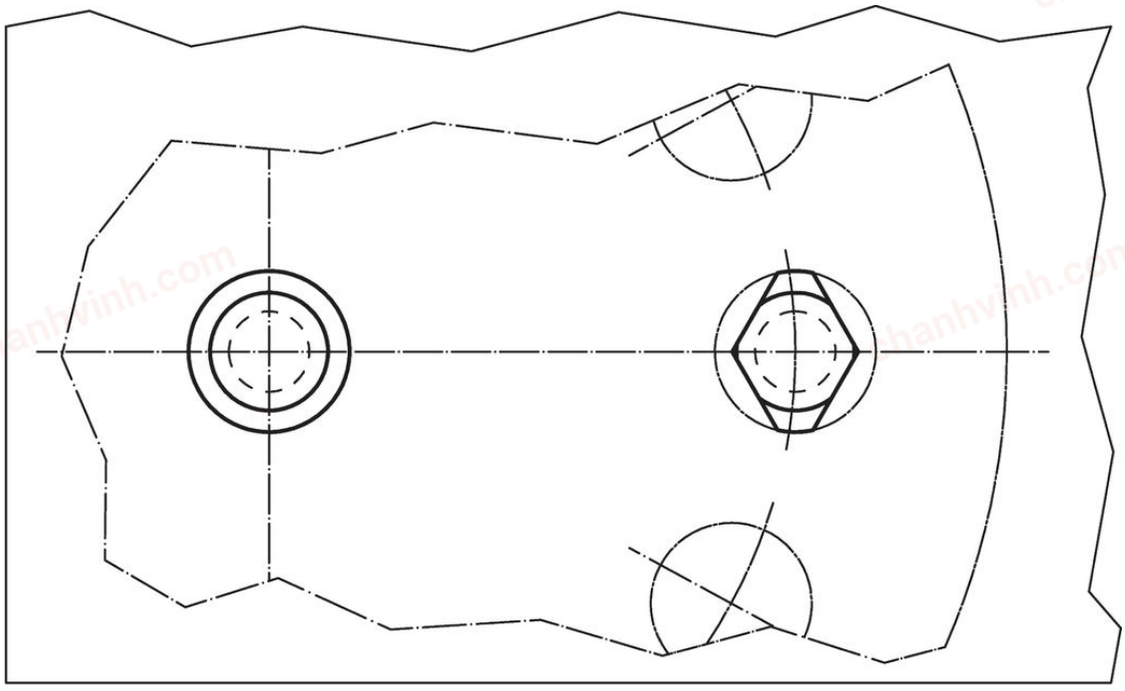

chanhvinh.com

Compliance

RoHS-compliant
Compliant with Directive 2011/65/EU [RoHS].

Does not contain SVHC substances
No SVHC substances with more than 0.1% w/w contained - SVHC list [REACH] as of 04.02.2026.

SCIP-code
N/A

Does not contain Proposition 65 substances
No Proposition 65 substances included.
https://www.P65Warnings.ca.gov/

Free from Conflict Minerals
This product does not contain any substances designated as "conflict minerals" such as tantalum, tin, gold or tungsten from the Democratic Republic of Congo or adjacent countries.

POP-compliant
Contains no persistent organic pollutants – Stockholm Convention [POP] as of September 2025.

PFAS-compliant
Contains no per- and polyfluoroalkyl substances (PFAS).

TSCA-compliant
Agent concentration in this product does not exceed the specified threshold.