chanhvinh.com

Hard Metal Inserts • front mounting

EH 22620.



Product Description

Basic element to be mounted into clamping devices, clamping jaws, clamping arms, claw feed systems and so forth.
The version with front installation is a particularly good option for applications that cannot be mounted from the rear.

Material

Insert
- Hard metal, ribbed

Body
- Heat-treated steel, tempered, phosphated

Assembly

Installation is performed using a locating hole, and the insert can be fastened from the front using a cap screw.

Drawing

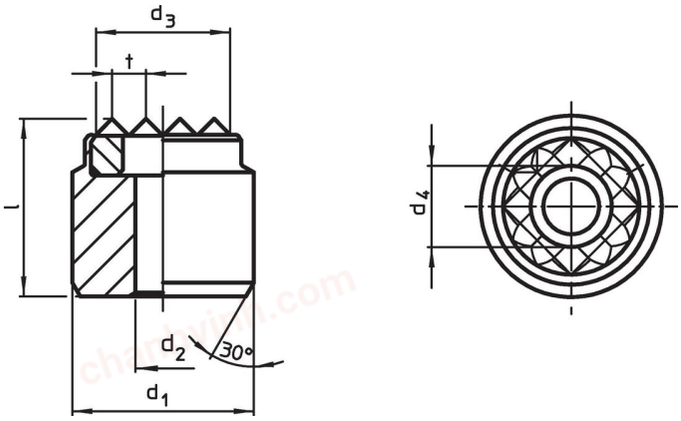

Order information

d1 n6	d2	Dimensions d3 ~ [mm]	d4	l	t	For screws [mm]	[g]	Art. No.
20	4.5	16	7.5	13	3	M4	29	22620.0415
25	4.5	21	7.5	13	3	M4	50	22620.0417

chanhvinh.com

Application example

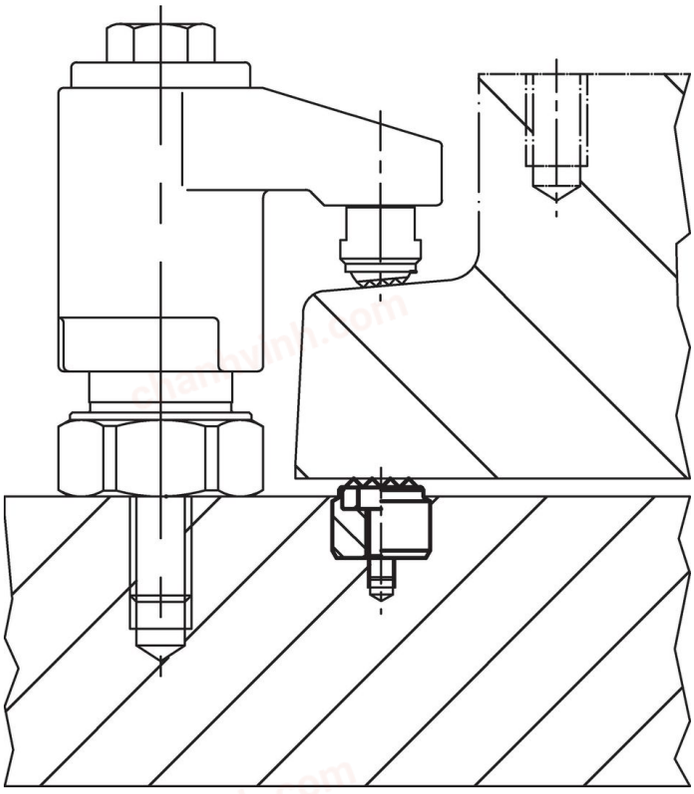

Compliance

RoHS-compliant
Contains lead – Compliant with Exemption 6(a)-I.

Contains SVHC substances >0,1% w/w
Contains lead - SVHC list [REACH] as of 04.02.2026.

SCIP-code
5b0aef13-c902-4b56-97c0-3f7b1b15bf7c

Contains Proposition 65 substances

Lead can lead to cancer, developmental disorders, and reproductive damage in men and to reproductive damage in women from exposure. https://www.P65Warnings.ca.gov/

Free from Conflict Minerals
This product does not contain any substances designated as "conflict minerals" such as tantalum, tin, gold or tungsten from the Democratic Republic of Congo or adjacent countries.

POP-compliant
Contains no persistent organic pollutants – Stockholm Convention [POP] as of September 2025.

PFAS-compliant
Contains no per- and polyfluoroalkyl substances (PFAS).

TSCA-compliant
Agent concentration in this product does not exceed the specified threshold.