chanhvinh.com

Seating Elements • with plastic bearing surface, orienting
EH 22600.



Product Description

Can be used as screw-in foot or thrust pad.
The plastic coating is gentle and protects high-quality surfaces. In addition, the oscillating seating is suitable for non-parallel surfaces.

Material

Ball element
- Stainless steel 1.4305

Nut
- Stainless steel A2

Pad
- Plastic (PEEK), blue

More information

Notes

Customized design on request.

Further products

- Thrust Pads, plastic
- Pins, with plastic bearing surface

Drawing

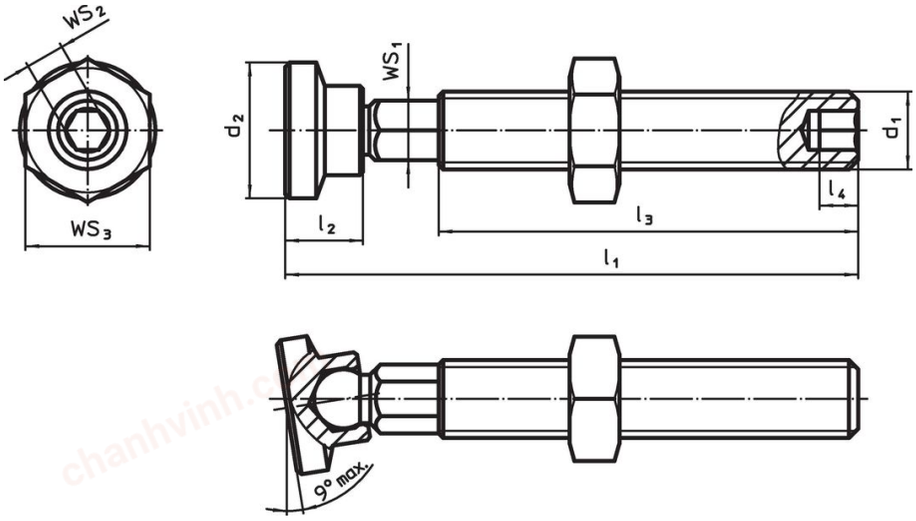

Order information

Dimensions						WS1	WS2	WS3	min.	max.		Art. No.
d1	l1 ±1	d2	l2	l3	l4							
[mm]						[mm]	[mm]	[mm]	[°C]		[g]	
M 5	**37.0**	8.5	5.0	27.0	2.5	4.0	2.5	8	-60	250	4.9	22600.0005
M 6	**44.0**	8.5	5.0	31.5	3.0	4.5	3.0	10	-60	250	7.5	22600.0006
M 8	**63.3**	12.5	8.7	49.0	4.0	6.0	4.0	13	-60	250	20.0	22600.0008
M10	**73.3**	12.5	8.7	56.9	5.0	8.0	5.0	17	-60	250	37.0	22600.0010
M12	**84.4**	16.8	12.0	64.3	6.0	9.0	6.0	19	-60	250	61.0	22600.0012
M16	**84.4**	16.8	12.0	62.7	8.0	11.0	8.0	24	-60	250	106.0	22600.0016

chanhvinh.com

Compliance

RoHS-compliant
Compliant with Directive 2011/65/EU [RoHS].

Does not contain SVHC substances
No SVHC substances with more than 0.1% w/w contained - SVHC list [REACH] as of 04.02.2026.

SCIP-code
N/A

Contains Proposition 65 substances


Nickel can cause cancer from exposure.
https://www.P65Warnings.ca.gov/

Free from Conflict Minerals
This product does not contain any substances designated as "conflict minerals" such as tantalum, tin, gold or tungsten from the Democratic Republic of Congo or adjacent countries.

POP-compliant
Contains no persistent organic pollutants – Stockholm Convention [POP] as of September 2025.

PFAS-compliant
Contains no per- and polyfluoroalkyl substances (PFAS).

TSCA-compliant
Agent concentration in this product does not exceed the specified threshold.