chanhvinh.com

Fulcrum Screws

EH 22591.



Product Description

Can be used as screw-in foot or thrust pad.
Compact design for simple levelling by means of the spanner flat at the bushing or preferably by means of an internal hexagon.

Material

Body
- Heat-treated steel, tempered, blackened
- Stainless steel 1.4305

Ball element
- Heat-treated steel, tempered, blackened
- Stainless steel 1.4305

More information

Notes

The fulcrum screws may exclusively be exposed to static loading.

Drawing

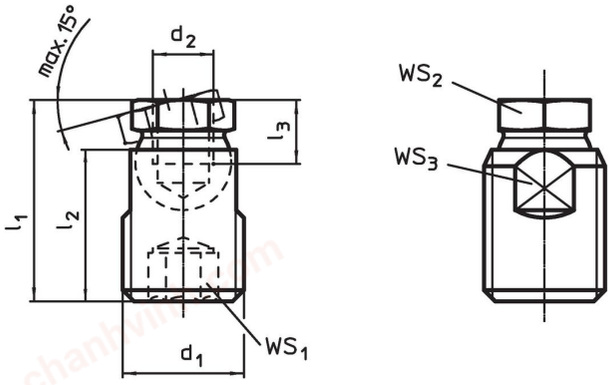

Order information

d_1	Dimensions d_2	l_1 ±0.5	l_2	l_3 min.	WS_1	WS_2	WS_3	Load capacity for static load max.		Art. No.
	[mm]				[mm]	[mm]	[mm]	[kN]	[g]	
Steel										
M12	**M 6**	21.2	16	5.0	6	9	10	10	10	22591.0006
M16	**M 8**	26.5	20	7.0	8	12	14	18	24	22591.0008
M24	**M10**	39.9	30	9.0	12	19	20	35	86	22591.0010
M24	**M12**	39.9	30	11.0	12	19	20	35	81	22591.0012
M30 x 2	**M16**	47.4	36	13.5	12	24	27	45	172	22591.0016
Stainless steel										
M12	**M 6**	21.2	16	5.0	6	9	10	8	10	22591.0206
M16	**M 8**	26.5	20	7.0	8	12	14	14	24	22591.0208
M24	**M10**	39.9	30	9.0	12	19	20	28	89	22591.0210
M24	**M12**	39.9	30	11.0	12	19	20	28	82	22591.0212
M30 x 2	**M16**	47.4	36	13.5	12	24	27	36	173	22591.0216

chanhvinh.com

Application example

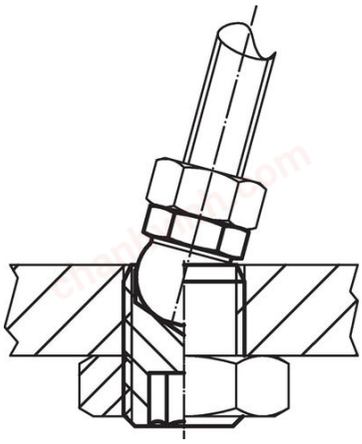

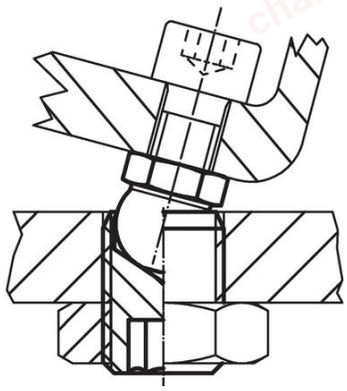

Compliance

For detailed compliance information please select the desired article number.