chanhvinh.com

Mounting Pads • protected against slipping

EH 22590.



Product Description

Mounting pads can be used as foot or thrust pad. Not parallel bearing surfaces up to 15° degrees can be compensated.
The plastic cover on the mounting pad prevents slipping.

Material

Ball element
- Free cutting steel, induction-hardened, blackened.
- Stainless steel 1.4305

Ball element with bolt
- Heat-treated steel, blackened
- Stainless steel 1.4305

Rubber cap
- Rubber, black

Lock nut
- Steel, blackened, ISO 4032
- Steel, blackened, DIN 934
- Stainless Steel A2, ISO 4032
- Stainless Steel A2, DIN 934

Pad
- Heat-treated steel, tempered, blackened
- Stainless steel 1.4305
- Thermoplastic POM, white

More information

Notes

For the versions d_1 = M10 and M12 the lock nut conforms to DIN 934.

Drawing

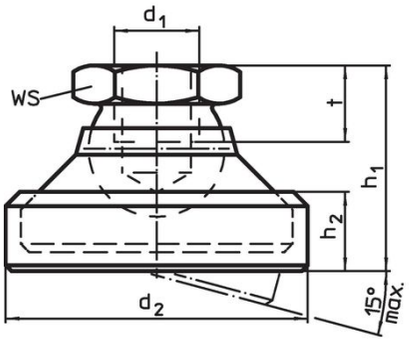

picture 1

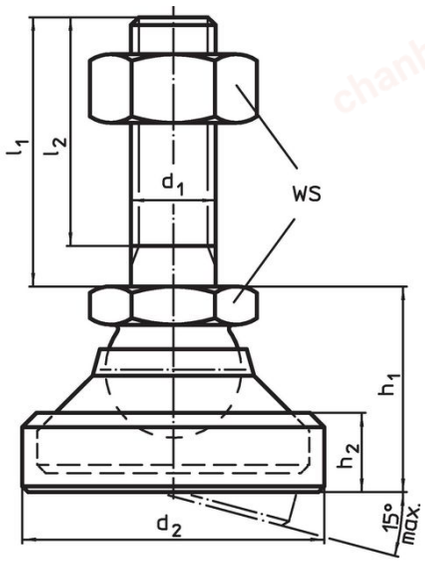

picture 2

Order information

Dimensions [mm]							WS [mm]	Load capacity for static load max. [kN]		Art. No.
d_1	l_1	d_2	l_2	h_1 ~	h_2	t				
pad and ball element – picture 1, Heat-treated steel										
M 6	–	22.5	–	16.5	6.4	5.0	10	10	19.0 g	22590.1006
M 8	–	28.0	–	20.6	8.3	7.0	13	18	40.0 g	22590.1008
M10	–	36.0	–	26.0	11.0	9.0	17	20	80.0 g	22590.1010

chanhvinh.com

Dimensions							WS	Load capacity for static load max.		Art. No.
d_1	l_1	d_2	l_2	h_1 ~	h_2	t				
[mm]							[mm]	[kN]		
M12	–	45.0	–	30.5	13.2	11.0	19	35	126.0 g	22590.1012
M16	–	56.0	–	37.5	15.5	13.5	24	45	280.0 g	22590.1016
M20	–	67.0	–	49.5	19.5	17.0	30	55	480.0 g	22590.1020
M24	–	69.0	–	55.0	24.0	19.0	36	65	554.0 g	22590.1024
pad and ball element – picture 1, Stainless steel										
M 6	–	22.5	–	16.5	6.4	5.0	10	8	17.0 g	22590.1206
M 8	–	28.0	–	20.6	8.3	7.0	13	14	36.0 g	22590.1208
M10	–	36.0	–	26.0	11.0	9.0	17	16	195.0 g	22590.1210
M12	–	45.0	–	30.5	13.2	11.0	19	28	127.0 g	22590.1212
M16	–	56.0	–	37.5	15.5	13.5	24	36	279.0 g	22590.1216
M20	–	67.0	–	49.5	19.5	17.0	30	44	500.0 g	22590.1220
M24	–	69.0	–	55.0	24.0	19.0	36	52	560.0 g	22590.1224
pad from thermoplastic, ball element from stainless steel – picture 1, Thermoplastic										
M 6	–	22.5	–	16.5	6.4	5.0	10	4	7.8 g	22590.1106
M 8	–	28.0	–	20.6	8.3	7.0	13	7	17.0 g	22590.1108
M10	–	36.0	–	26.0	11.0	9.0	17	10	34.0 g	22590.1110
M12	–	45.0	–	30.5	13.2	11.0	19	18	57.0 g	22590.1112
M16	–	56.0	–	37.5	15.5	13.5	24	20	96.0 g	22590.1116
M20	–	67.0	–	49.5	19.5	17.0	30	22	190.0 g	22590.1120
M24	–	69.0	–	55.0	24.0	19.0	36	25	260.0 g	22590.1124
pad and ball element with bolt from steel – picture 2, Heat-treated steel										
M 6	**60**	22.5	57.0	16.5	6.4	–	10	10	32.0 g	22590.1410
M 8	**80**	28.0	76.0	20.6	8.3	–	13	18	69.0 g	22590.1422
M10	**100**	36.0	95.5	26.0	11.0	–	17	20	147.0 g	22590.1438
M10	**150**	36.0	145.5	26.0	11.0	–	17	20	156.0 g	22590.1442
M12	**100**	45.0	94.5	30.5	13.2	–	19	35	252.0 g	22590.1452
M12	**150**	45.0	144.5	30.5	13.2	–	19	35	100.0 g	22590.1456
M16	**100**	56.0	94.0	37.5	15.5	–	24	45	440.0 g	22590.1468
M16	**200**	56.0	194.0	37.5	15.5	–	24	45	600.0 g	22590.1472
M20	**100**	67.0	92.5	49.5	19.5	–	30	55	762.0 g	22590.1482
M20	**200**	67.0	192.5	49.5	19.5	–	30	55	1.1 kg	22590.1488
M24	**100**	69.0	91.0	55.0	24.0	–	36	65	1.0 kg	22590.1495
M24	**200**	69.0	191.0	55.0	24.0	–	36	65	1.3 kg	22590.1498
pad and ball element with bolt from steel – picture 2, Stainless steel										
M 6	**60**	22.5	57.0	16.5	6.4	–	10	8	50.0 g	22590.1610
M 8	**80**	28.0	76.0	20.6	8.3	–	13	14	71.0 g	22590.1622
M10	**100**	36.0	95.5	26.0	11.0	–	17	16	150.0 g	22590.1638
M10	**150**	36.0	145.5	26.0	11.0	–	17	16	169.0 g	22590.1642
M12	**100**	45.0	94.5	30.5	13.2	–	19	28	227.0 g	22590.1652
M12	**150**	45.0	144.5	30.5	13.2	–	19	28	260.0 g	22590.1656
M16	**100**	56.0	94.0	37.5	15.5	–	24	36	441.0 g	22590.1668
M16	**200**	56.0	194.0	37.5	15.5	–	24	36	630.0 g	22590.1672
M20	**100**	67.0	92.5	49.5	19.5	–	30	44	845.0 g	22590.1682
M20	**200**	67.0	192.5	49.5	19.5	–	30	44	1.1 kg	22590.1688
M24	**100**	69.0	91.0	55.0	24.0	–	36	52	1000.0 g	22590.1695
M24	**200**	69.0	191.0	55.0	24.0	–	36	52	1.4 kg	22590.1698
pad from thermoplastic, ball element with bolt from stainless steel – picture 2, Thermoplastic										
M 6	**60**	22.5	57.0	16.5	6.4	–	10	4	23.0 g	22590.1510
M 8	**80**	28.0	76.0	20.6	8.3	–	13	7	49.0 g	22590.1522
M10	**100**	36.0	95.5	26.0	11.0	–	17	10	100.0 g	22590.1538
M10	**150**	36.0	145.5	26.0	11.0	–	17	10	124.0 g	22590.1542
M12	**100**	45.0	94.5	30.5	13.2	–	19	18	150.0 g	22590.1552
M12	**150**	45.0	144.5	30.5	13.2	–	19	18	150.0 g	22590.1556
M16	**100**	56.0	94.0	37.5	15.5	–	24	20	285.0 g	22590.1568
M16	**200**	56.0	194.0	37.5	15.5	–	24	20	414.0 g	22590.1572
M20	**100**	67.0	92.5	49.5	19.5	–	30	22	573.0 g	22590.1582
M20	**200**	67.0	192.5	49.5	19.5	–	30	22	704.0 g	22590.1588
M24	**100**	69.0	91.0	55.0	24.0	–	36	25	718.0 g	22590.1595
M24	**200**	69.0	191.0	55.0	24.0	–	36	25	1016.0 g	22590.1598

chanhvinh.com

Compliance

RoHS-compliant
Compliant with Directive 2011/65/EU [RoHS].

Does not contain SVHC substances
No SVHC substances with more than 0.1% w/w contained - SVHC list [REACH] as of 04.02.2026.

SCIP-code
N/A

Contains Proposition 65 substances

Nickel can cause cancer from exposure.
https://www.P65Warnings.ca.gov/

Free from Conflict Minerals
This product does not contain any substances designated as "conflict minerals" such as tantalum, tin, gold or tungsten from the Democratic Republic of Congo or adjacent countries.

POP-compliant
Contains no persistent organic pollutants – Stockholm Convention [POP] as of September 2025.

PFAS-compliant
Contains no per- and polyfluoroalkyl substances (PFAS).

TSCA-compliant
Agent concentration in this product does not exceed the specified threshold.