chanhvinh.com

Mounting Pads

EH 22590.



Product Description

Mounting pads can be used as foot or thrust pad. Not parallel bearing surfaces up to 15° degrees can be compensated.

Material

Ball element
- Heat-treated steel, tempered, blackened
- Stainless steel 1.4305

Ball element with bolt
- Heat-treated steel, tempered, blackened
- Stainless steel 1.4305

Lock nut
- Steel, blackened, ISO 4032
- Steel, blackened, DIN 934
- Stainless Steel A2, ISO 4032
- Stainless Steel A2, DIN 934

Pad
- Heat-treated steel, blackened
- Stainless steel 1.4305
- Thermoplastic POM, white

More information

Notes

For the versions d_1 = M10 and M12 the lock nut conforms to DIN 934.

Drawing

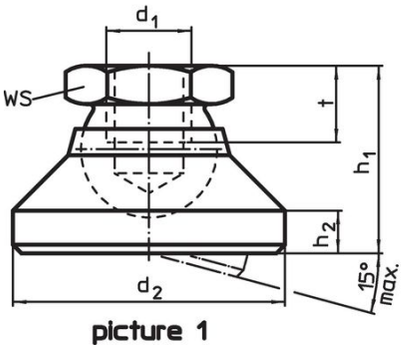

picture 1

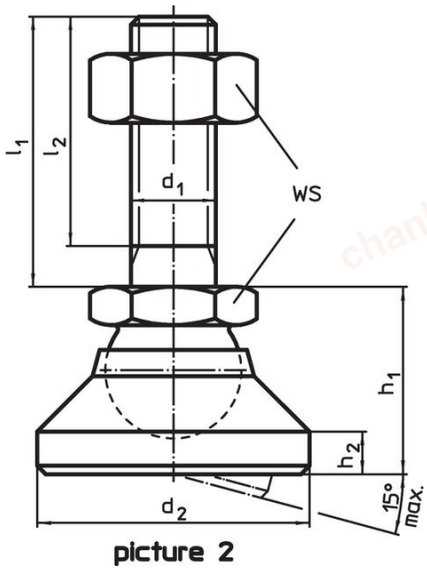

picture 2

Order information

Dimensions							WS	Load capacity for static load max.	Temperature		Weight	Art. No.
d_1	l_1	d_2	l_2	h_1 ~	h_2	t			min.	max.		
[mm]							[mm]	[kN]	[°C]			
pad and ball element – picture 1, Heat-treated steel												
M 6	–	20	–	14	2.5	5.0	10	10	–	250	15.0 g	22590.0006
M 8	–	25	–	18	4.0	7.0	13	18	–	250	33.0 g	22590.0008
M10	–	32	–	22	5.0	9.0	17	20	–	250	66.0 g	22590.0010
M12	–	40	–	26	6.0	11.0	19	35	–	250	112.0 g	22590.0012
M16	–	50	–	32	7.0	13.5	24	45	–	250	248.0 g	22590.0016
M20	–	60	–	42	8.0	17.0	30	55	–	250	448.0 g	22590.0020
M24	–	60	–	45	9.5	19.0	36	65	–	250	498.0 g	22590.0024

chanhvinh.com

Dimensions							WS	Load capacity for static load max.	min.	max.		Art. No.
d_1	l_1	d_2	l_2	h_1 ~	h_2	t						
[mm]							[mm]	[kN]	[°C]			
pad and ball element – picture 1, Stainless steel												
M 6	–	20	–	14	2.5	5.0	10	8	–	250	15.0 g	22590.0206
M 8	–	25	–	18	4.0	7.0	13	14	–	250	33.0 g	22590.0208
M10	–	32	–	22	5.0	9.0	17	16	–	250	67.0 g	22590.0210
M12	–	40	–	26	6.0	11.0	19	28	–	250	113.0 g	22590.0212
M16	–	50	–	32	7.0	13.5	24	36	–	250	244.0 g	22590.0216
M20	–	60	–	42	8.0	17.0	30	44	–	250	448.0 g	22590.0220
M24	–	60	–	45	9.5	19.0	36	52	–	250	504.0 g	22590.0224
pad from thermoplastic, ball element from stainless steel – picture 1, Thermoplastic												
M 6	–	20	–	14	2.5	5.0	10	4	-30	80	6.1 g	22590.0106
M 8	–	25	–	18	4.0	7.0	13	7	-30	80	13.0 g	22590.0108
M10	–	32	–	22	5.0	9.0	17	10	-30	80	26.0 g	22590.0110
M12	–	40	–	26	6.0	11.0	19	18	-30	80	40.0 g	22590.0112
M16	–	50	–	32	7.0	13.5	24	20	-30	80	75.0 g	22590.0116
M20	–	60	–	42	8.0	17.0	30	22	-30	80	149.0 g	22590.0120
M24	–	60	–	45	9.5	19.0	36	25	-30	80	184.0 g	22590.0124
pad and ball element with bolt from steel – picture 2, Heat-treated steel												
M 6	**60**	20	57.0	14	2.5	–	10	10	–	250	29.0 g	22590.0410
M 8	**80**	25	76.0	18	4.0	–	13	18	–	250	66.0 g	22590.0422
M10	**100**	32	95.5	22	5.0	–	17	20	–	250	132.0 g	22590.0438
M10	**150**	32	145.5	22	5.0	–	17	20	–	250	156.0 g	22590.0442
M12	**100**	40	94.5	26	6.0	–	19	35	–	250	235.0 g	22590.0452
M12	**150**	40	144.5	26	6.0	–	19	35	–	250	321.0 g	22590.0456
M16	**100**	50	94.0	32	7.0	–	24	45	–	250	461.0 g	22590.0468
M16	**200**	50	194.0	32	7.0	–	24	45	–	250	611.0 g	22590.0472
M20	**100**	60	92.5	42	8.0	–	30	55	–	250	789.0 g	22590.0482
M20	**200**	60	192.5	42	8.0	–	30	55	–	250	1.0 kg	22590.0488
M24	**100**	60	91.0	45	9.5	–	36	65	–	250	992.0 g	22590.0495
M24	**200**	60	191.0	45	9.5	–	36	65	–	250	1.3 kg	22590.0498
pad and ball element with bolt from steel – picture 2, Stainless steel												
M 6	**60**	20	57.0	14	2.5	–	10	8	–	250	29.0 g	22590.0610
M 8	**80**	25	76.0	18	4.0	–	13	14	–	250	66.0 g	22590.0622
M10	**100**	32	95.5	22	5.0	–	17	16	–	250	134.0 g	22590.0638
M10	**150**	32	145.5	22	5.0	–	17	16	–	250	158.0 g	22590.0642
M12	**100**	40	94.5	26	6.0	–	19	28	–	250	212.0 g	22590.0652
M12	**150**	40	144.5	26	6.0	–	19	28	–	250	248.0 g	22590.0656
M16	**100**	50	94.0	32	7.0	–	24	36	–	250	412.0 g	22590.0668
M16	**200**	50	194.0	32	7.0	–	24	36	–	250	618.0 g	22590.0672
M20	**100**	60	92.5	42	8.0	–	30	44	–	250	796.0 g	22590.0682
M20	**200**	60	192.5	42	8.0	–	30	44	–	250	1.0 kg	22590.0688
M24	**100**	60	91.0	45	9.5	–	36	52	–	250	1.0 kg	22590.0695
M24	**200**	60	191.0	45	9.5	–	36	52	–	250	1.3 kg	22590.0698
pad from thermoplastic, ball element with bolt from stainless steel – picture 2, Thermoplastic												
M 6	**60**	20	57.0	14	2.5	–	10	4	-30	80	20.0 g	22590.0510
M 8	**80**	25	76.0	18	4.0	–	13	7	-30	80	46.0 g	22590.0522
M10	**100**	32	95.5	22	5.0	–	17	10	-30	80	93.0 g	22590.0538
M10	**150**	32	145.5	22	5.0	–	17	10	-30	80	117.0 g	22590.0542
M12	**100**	40	94.5	26	6.0	–	19	18	-30	80	138.0 g	22590.0552
M12	**150**	40	144.5	26	6.0	–	19	18	-30	80	175.0 g	22590.0556
M16	**100**	50	94.0	32	7.0	–	24	20	-30	80	300.0 g	22590.0568
M16	**200**	50	194.0	32	7.0	–	24	20	-30	80	400.0 g	22590.0572
M20	**100**	60	92.5	42	8.0	–	30	22	-30	80	526.0 g	22590.0582
M20	**200**	60	192.5	42	8.0	–	30	22	-30	80	760.0 g	22590.0588
M24	**100**	60	91.0	45	9.5	–	36	25	-30	80	682.0 g	22590.0595
M24	**200**	60	191.0	45	9.5	–	36	25	-30	80	1.1 kg	22590.0598

chanhvinh.com

Application example

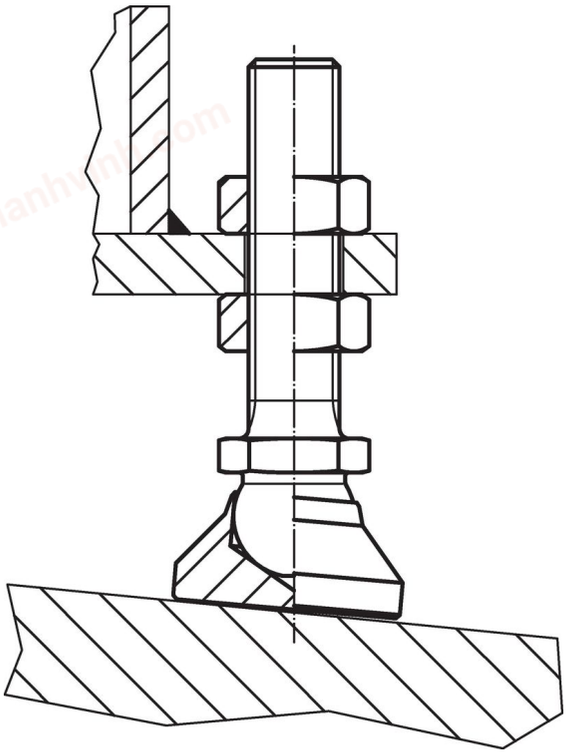

Compliance

RoHS-compliant
Compliant with Directive 2011/65/EU [RoHS].

Does not contain SVHC substances
No SVHC substances with more than 0.1% w/w contained - SVHC list [REACH] as of 04.02.2026.

SCIP-code
N/A

Contains Proposition 65 substances
Nickel can cause cancer from exposure.
https://www.P65Warnings.ca.gov/

Free from Conflict Minerals
This product does not contain any substances designated as "conflict minerals" such as tantalum, tin, gold or tungsten from the Democratic Republic of Congo or adjacent countries.

POP-compliant
Contains no persistent organic pollutants – Stockholm Convention [POP] as of September 2025.

PFAS-compliant
Contains no per- and polyfluoroalkyl substances (PFAS).

TSCA-compliant
Agent concentration in this product does not exceed the specified threshold.