chanhvinh.com



# **Thrust Pads** • DIN 6311 and low model
## EH 22560.



## Product Description

Combinable with grub screws DIN 6332 with thrust point EH 22540.

### Material

- Steel, case-hardened, blackened. Snap ring inlayed.
- Stainless steel

### Assembly

The thrust pad is to be held the way the spring retainer lies in the recess with its open side at the bottom. The grub screw is inclined as far as possible in the direction of the open side of the ring and pressed in.

**More information**

### Further products

- Grub Screws, DIN 6332 with thrust point

## Drawing

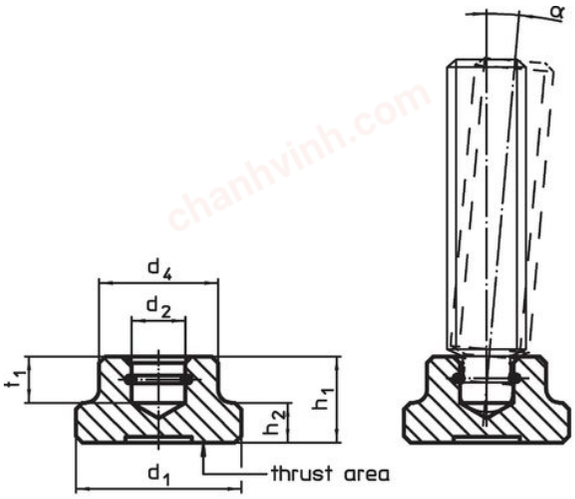


picture 1

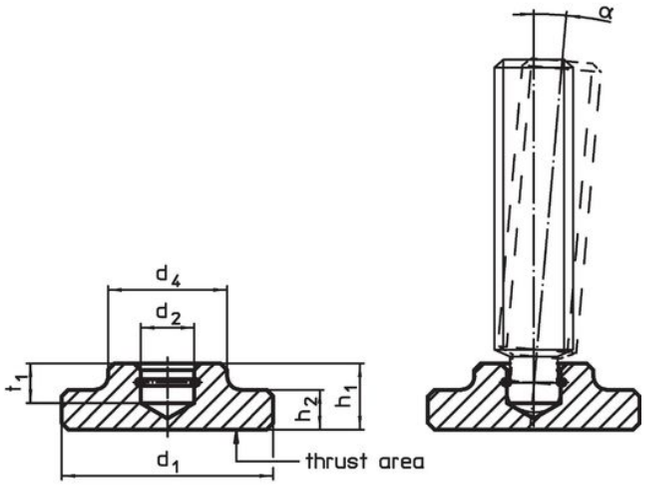


picture 2

## Order information

| $d_1$ | $d_2$ H12 | Dimensions $d_4$ | $h_1$ | $h_2$ | $t_1$ | For grub screws with thrust point DIN 6332 | α min. | | Art. No. |
|---|---|---|---|---|---|---|---|---|---|
| | | [mm] | | | | [mm] | | [g] | |
| **DIN 6311 with snap ring, form S – picture 1, Steel** | | | | | | | | | |
| **12** | 4.6 | 10 | 7 | 2.5 | 4.0 | M 6 | 7° | 4.3 | 22560.0012 |
| **16** | 6.1 | 12 | 9 | 4.0 | 5.0 | M 8 | 4° | 9.4 | 22560.0016 |
| **20** | 8.1 | 15 | 11 | 5.0 | 6.0 | M10 | 3° | 18.0 | 22560.0020 |
| **25** | 8.1 | 18 | 13 | 6.0 | 7.0 | M12 | 3° | 33.0 | 22560.0025 |
| **32** | 12.1 | 22 | 15 | 7.0 | 7.5 | M16 | 5° | 58.0 | 22560.0032 |
| **40** | 15.6 | 28 | 16 | 9.0 | 8.0 | M20 | 4° | 105.0 | 22560.0040 |
| **DIN 6311 with snap ring, form S – picture 1, Stainless steel** | | | | | | | | | |
| **12** | 4.6 | 10 | 7 | 2.5 | 4.0 | M 6 | 7° | 4.2 | 22560.0112 |
| **16** | 6.1 | 12 | 9 | 4.0 | 5.0 | M 8 | 4° | 9.3 | 22560.0116 |
| **20** | 8.1 | 15 | 11 | 5.0 | 6.0 | M10 | 3° | 18.0 | 22560.0120 |
| **25** | 8.1 | 18 | 13 | 6.0 | 7.0 | M12 | 3° | 33.0 | 22560.0125 |
| **32** | 12.1 | 22 | 15 | 7.0 | 7.5 | M16 | 5° | 61.0 | 22560.0132 |
| **40** | 15.6 | 28 | 16 | 9.0 | 8.0 | M20 | 4° | 109.0 | 22560.0140 |
| **low model, with increased thrust area and spring retainer – picture 2, Steel** | | | | | | | | | |
| **25** | 6.1 | 12 | 8 | 4.0 | 4.5 | M 8 | 4° | 18.0 | 22560.0425 |
| **32** | 8.1 | 18 | 10 | 6.0 | 6.0 | M10/M12 | 3° | 43.0 | 22560.0432 |
| **40** | 12.1 | 22 | 12 | 7.0 | 7.0 | M16 | 5° | 75.0 | 22560.0440 |

chanhvinh.com



| Dimensions | | | | | | For grub screws with thrust point DIN 6332 | α | | Art. No. |
|---|---|---|---|---|---|---|---|---|---|
| $d_1$ | $d_2$ H12 | $d_4$ | $h_1$ | $h_2$ | $t_1$ | | min. | | |
| [mm] | | | | | | [mm] | | [g] | |
| **low model, with increased thrust area and spring retainer – picture 2, Stainless steel** | | | | | | | | | |
| **25** | 6.1 | 12 | 8 | 4.0 | 4.5 | M 8 | 4° | 18.0 | 22560.1425 |
| **32** | 8.1 | 18 | 10 | 6.0 | 6.0 | M10/M12 | 3° | 43.0 | 22560.1432 |
| **40** | 12.1 | 22 | 12 | 7.0 | 7.0 | M16 | 5° | 78.0 | 22560.1440 |

## Application example

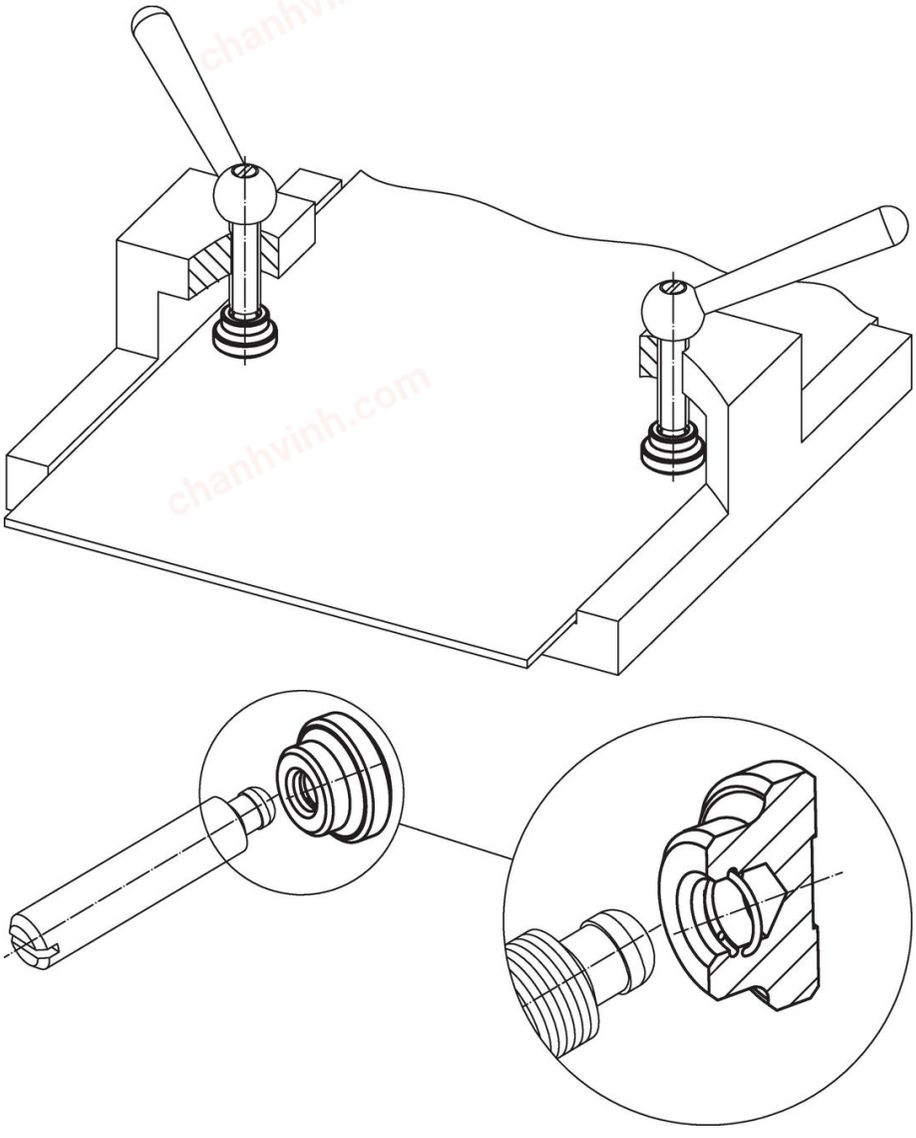

## Compliance

For detailed compliance information please select the desired article number.