chanhvinh.com

Clamp Lock Pins • with button handle

EH 22410. /EH 22420.



Product Description

For rapid fastening, locking, adjusting, replacing, and securing in blind holes (H11) without additional locating bushings.
Quick and easy to release for connections which are made repeatedly. Flexible use because the balls are clamped between bolt and hole.
All versions are corrosion resistant. When using stainless steel 1.4542: high-strength, hardened, abrasion resistant pin with high load capacity.

Material

Pin part
- Stainless steel 1.4305
- Stainless steel 1.4542, precipitation-hardened

Handle
- Aluminium, black similar to RAL 9005

Press button
- Case-hardened steel, nitrided, yellow similar to RAL 1016

Spring
- Stainless steel

Assembly

For use, H11 boreholes are sufficient.

Mounting:
1. Press in the button and hold it down
2. Insert the lifting pin
3. Release the button (The button must be back in its original position)

Dismantling:
1. Press in the button and hold it down.
2. Remove the lifting pin.
3. Release the button.

Operation

Clamp lock pins can be used in blind holes. The holding forces achieved in an H11 borehole depends on the material of the counterpart:
- Steel, hardened - min. 30 N
- Steel, soft - min. 120 N
- Stainless steel, soft - min. 120 N
- Al, aluminum alloy - min. 250 N

More information

Notes

Customized design on request.
The clamp lock pin must not be used for lifting loads.

Accessories

Can easily be fitted with retaining cable EH 22400.

Further products

- Retaining Cables

Drawing

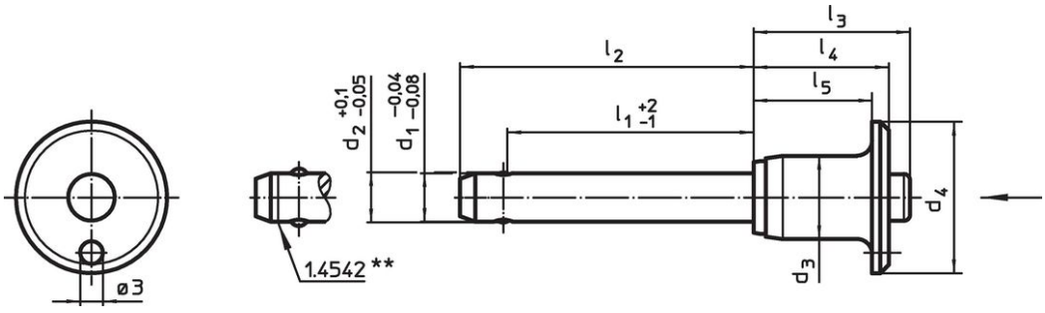

** Types from stainless steel 1.4542 with marking.

Order information

Dimensions									Holding force[1] min. Steel, soft	Location hole H11	min.	max.		Shearing resistance, two-shear[2] min.	Art. No.
d_1 -0.04 -0.08	l_1 +2 -1	d_2 +0.1 -0.05	d_3	d_4	l_2	l_3	l_4	l_5							
[mm]									[N]	[mm]	[°C]		[g]	[kN]	
Stainless steel 1.4305															
6	10	6.2	11.3	20	17.4	20.7	17.6	14.6	120	6	-30	150	13	21	22410.0022
6	20	6.2	11.3	20	27.4	20.7	17.6	14.6	120	6	-30	150	15	21	22410.0024
6	40	6.2	11.3	20	47.4	20.7	17.6	14.6	120	6	-30	150	19	21	22410.0028
6	60	6.2	11.3	20	67.4	20.7	17.6	14.6	120	6	-30	150	23	21	22410.0032
8	10	8.3	14.1	25	18.6	27.3	22.6	18.6	120	8	-30	150	25	38	22410.0042
8	20	8.3	14.1	25	28.6	27.3	22.6	18.6	120	8	-30	150	29	38	22410.0044
8	40	8.3	14.1	25	48.6	27.3	22.6	18.6	120	8	-30	150	36	38	22410.0048
8	60	8.3	14.1	25	68.6	27.3	22.6	18.6	120	8	-30	150	44	38	22410.0052
8	80	8.3	14.1	25	88.6	27.3	22.6	18.6	120	8	-30	150	51	38	22410.0056
10	20	10.3	14.1	25	30.0	27.3	22.6	18.6	120	10	-30	150	35	60	22410.0062
10	40	10.3	14.1	25	50.0	27.3	22.6	18.6	120	10	-30	150	47	60	22410.0066
10	60	10.3	14.1	25	70.0	27.3	22.6	18.6	120	10	-30	150	59	60	22410.0070
10	80	10.3	14.1	25	90.0	27.3	22.6	18.6	120	10	-30	150	70	60	22410.0072
10	100	10.3	14.1	25	110.0	27.3	22.6	18.6	120	10	-30	150	82	60	22410.0074
12	20	12.3	17.7	35	31.0	33.2	27.3	22.3	120	12	-30	150	66	87	22410.0082
12	40	12.3	17.7	35	51.0	33.2	27.3	22.3	120	12	-30	150	83	87	22410.0086
12	60	12.3	17.7	35	71.0	33.2	27.3	22.3	120	12	-30	150	100	87	22410.0090
12	80	12.3	17.7	35	91.0	33.2	27.3	22.3	120	12	-30	150	117	87	22410.0092
12	100	12.3	17.7	35	111.0	33.2	27.3	22.3	120	12	-30	150	134	87	22410.0094
16	30	16.5	23.4	40	44.4	42.2	34.5	28.5	120	16	-30	150	150	155	22410.0102
16	60	16.5	23.4	40	74.4	42.2	34.5	28.5	120	16	-30	150	196	155	22410.0107
16	90	16.5	23.4	40	104.4	42.2	34.5	28.5	120	16	-30	150	242	155	22410.0110
16	120	16.5	23.4	40	134.4	42.2	34.5	28.5	120	16	-30	150	290	155	22410.0113
Stainless steel 1.4542, precipitation-hardened															
6	10	6.2	11.3	20	17.4	20.7	17.6	14.6	120	6	-30	150	13	35	22420.0022
6	20	6.2	11.3	20	27.4	20.7	17.6	14.6	120	6	-30	150	15	35	22420.0024
6	40	6.2	11.3	20	47.4	20.7	17.6	14.6	120	6	-30	150	19	35	22420.0028
6	60	6.2	11.3	20	67.4	20.7	17.6	14.6	120	6	-30	150	23	35	22420.0032
8	10	8.3	14.1	25	18.6	27.3	22.6	18.6	120	8	-30	150	25	63	22420.0042
8	20	8.3	14.1	25	28.6	27.3	22.6	18.6	120	8	-30	150	28	63	22420.0044
8	40	8.3	14.1	25	48.6	27.3	22.6	18.6	120	8	-30	150	36	63	22420.0048
8	60	8.3	14.1	25	68.6	27.3	22.6	18.6	120	8	-30	150	43	63	22420.0052
8	80	8.3	14.1	25	88.6	27.3	22.6	18.6	120	8	-30	150	50	63	22420.0056
10	20	10.3	14.1	25	30.0	27.3	22.6	18.6	120	10	-30	150	35	100	22420.0062
10	40	10.3	14.1	25	50.0	27.3	22.6	18.6	120	10	-30	150	47	100	22420.0066
10	60	10.3	14.1	25	70.0	27.3	22.6	18.6	120	10	-30	150	58	100	22420.0070
10	80	10.3	14.1	25	90.0	27.3	22.6	18.6	120	10	-30	150	70	100	22420.0072
10	100	10.3	14.1	25	110.0	27.3	22.6	18.6	120	10	-30	150	81	100	22420.0074
12	20	12.3	17.7	35	31.0	33.2	27.3	22.3	120	12	-30	150	65	144	22420.0082
12	40	12.3	17.7	35	51.0	33.2	27.3	22.3	120	12	-30	150	82	144	22420.0086
12	60	12.3	17.7	35	71.0	33.2	27.3	22.3	120	12	-30	150	99	144	22420.0090
12	80	12.3	17.7	35	91.0	33.2	27.3	22.3	120	12	-30	150	116	144	22420.0092
12	100	12.3	17.7	35	111.0	33.2	27.3	22.3	120	12	-30	150	133	144	22420.0094
16	30	16.5	23.4	40	44.4	42.2	34.5	28.5	120	16	-30	150	148	257	22420.0102
16	60	16.5	23.4	40	74.4	42.2	34.5	28.5	120	16	-30	150	194	257	22420.0107
16	90	16.5	23.4	40	104.4	42.2	34.5	28.5	120	16	-30	150	240	257	22420.0110
16	120	16.5	23.4	40	134.4	42.2	34.5	28.5	120	16	-30	150	287	257	22420.0113

[1] The holding force depends on the material of the counterpart - for further values see "operation".

[2] Shearing resistance similar to DIN 50141

chanhvinh.com

Application example

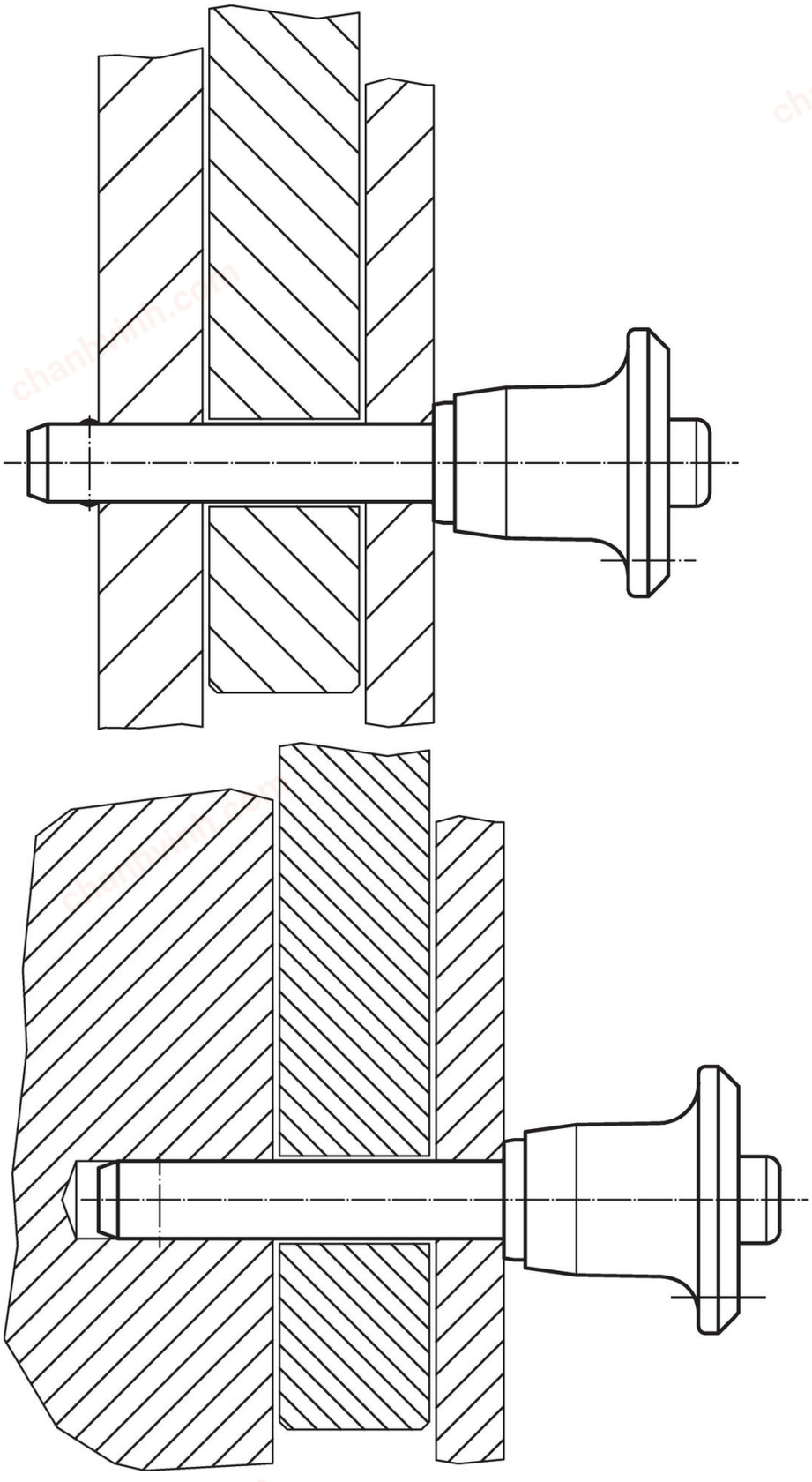

chanhvinh.com

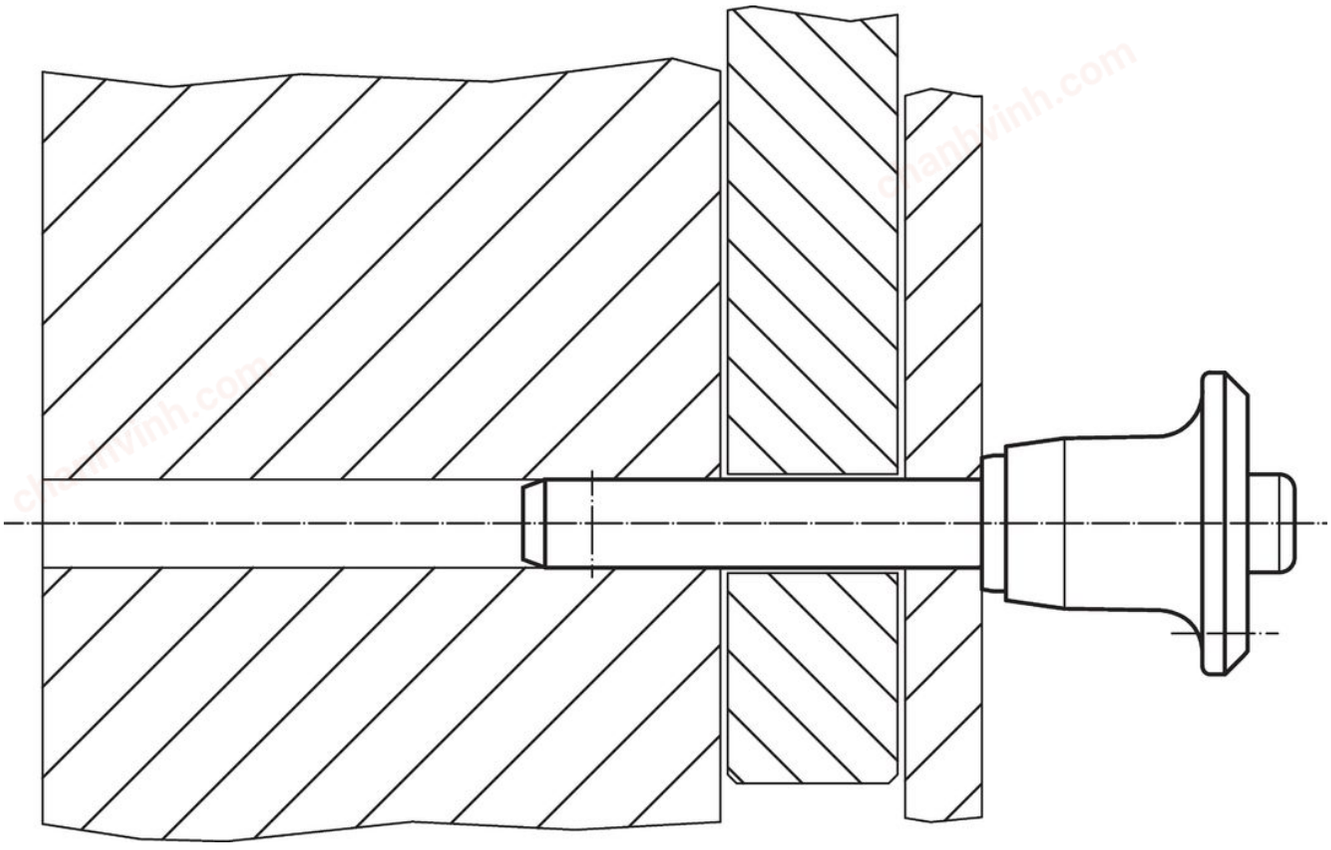

Compliance

Non-RoHS compliant
Not compliant according to Directive 2011/65/EU and Directive 2015/863.

Contains SVHC substances >0,1% w/w
Contains lead - SVHC list [REACH] as of 04.02.2026.

SCIP-code
2897fbf1-eef8-4763-b641-20a0b03bea0a

Contains Proposition 65 substances

Nickel can cause cancer from exposure. / Lead can lead to cancer, developmental disorders, and reproductive damage in men and to reproductive damage in women from exposure.
https://www.P65Warnings.ca.gov/

Free from Conflict Minerals
This product does not contain any substances designated as "conflict minerals" such as tantalum, tin, gold or tungsten from the Democratic Republic of Congo or adjacent countries.

POP-compliant
Contains no persistent organic pollutants – Stockholm Convention [POP] as of September 2025.

PFAS-compliant
Contains no per- and polyfluoroalkyl substances (PFAS).

TSCA-compliant
Agent concentration in this product does not exceed the specified threshold.