chanhvinh.com

Locating Bushings • with flange, for ball lock pins and socket pins
EH 22400.



Product Description

Used for thin sheet materials, e.g. in vehicle construction, apparatus engineering, container construction and the aviation industry.
Locating bushings are used for quick and safe locating of ball lock pins EH 22340., EH 22350., EH 22370. and EH 22380. and socket pins EH 22400.
The bearing surface of the flange ensures optimum force distribution at components with thin walls.
All versions are corrosion and abrasion resistant.

Material

- Stainless steel 1.4305

Drawing

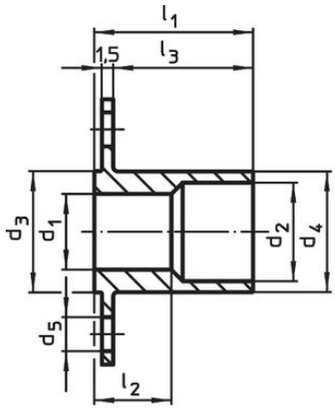

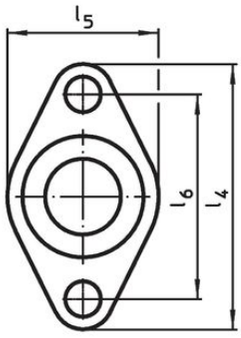

picture 1

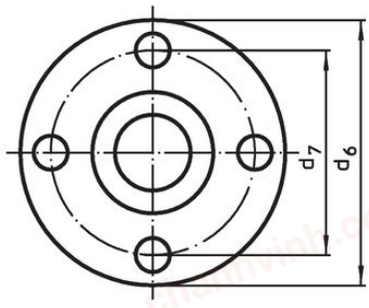

picture 2

Order information

Dimensions														Art. No.
d_1 H11	d_2	d_3 -0.05	d_4 -0.1	d_5	d_6	d_7	l_1	l_2	l_3	l_4	l_5	l_6	[g]	
					[mm]									
with oval flange – picture 1														
5	**8**	10	9.9	3.4	–	–	12	5.4	9.5	25	15	19	5.8	22400.0305
6	**8**	10	9.9	3.4	–	–	13	5.3	10.5	25	15	19	5.5	22400.0306
8	**10**	12	11.9	4.5	–	–	19	10.3	16.5	30	18	22	9.8	22400.0308
10	**13**	16	15.9	4.5	–	–	21	10.2	18.5	35	20	27	18.0	22400.0310
12	**15**	19	18.9	4.5	–	–	27	15.2	24.5	40	24	30	33.0	22400.0312
16	**20**	24	23.9	5.5	–	–	30	15.3	27.5	50	30	40	51.0	22400.0316
with round flange – picture 2														
5	**8**	10	9.9	3.4	25	19	12	5.4	9.5	–	–	–	8.3	22400.0405
6	**8**	10	9.9	3.4	25	19	13	5.3	10.5	–	–	–	8.1	22400.0406
8	**10**	12	11.9	4.5	30	22	19	10.3	16.5	–	–	–	15.0	22400.0408
10	**13**	16	15.9	4.5	35	27	21	10.2	18.5	–	–	–	23.0	22400.0410
12	**15**	19	18.9	4.5	40	30	27	15.2	24.5	–	–	–	40.0	22400.0412
16	**20**	24	23.9	5.5	50	40	30	15.3	27.5	–	–	–	62.0	22400.0416

chanhvinh.com

Application example

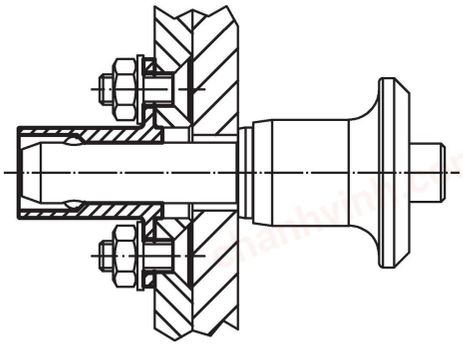

Compliance

RoHS-compliant
Compliant with Directive 2011/65/EU [RoHS].

Does not contain SVHC substances
No SVHC substances with more than 0.1% w/w contained - SVHC list [REACH] as of 04.02.2026.

SCIP-code
N/A

Contains Proposition 65 substances
Nickel can cause cancer from exposure.
https://www.P65Warnings.ca.gov/

Free from Conflict Minerals
This product does not contain any substances designated as "conflict minerals" such as tantalum, tin, gold or tungsten from the Democratic Republic of Congo or adjacent countries.

POP-compliant
Contains no persistent organic pollutants – Stockholm Convention [POP] as of September 2025.

PFAS-compliant
Contains no per- and polyfluoroalkyl substances (PFAS).

TSCA-compliant
Agent concentration in this product does not exceed the specified threshold.