chanhvinh.com

Retaining Cables

EH 22400.



Product Description

These retaining cables are intended for attachment to ball lock pins EH 22340., EH 22350., EH 22370. and EH 22380., as well as clamping pins EH 22360. and socket pins EH 22400., and serve as loss prevention.

Material

Retaining cable
- Stainless steel
- Thermoplastic PA 6, grey
- Thermoplastic PUR, black, with filling thread

Coating retaining cable
- Without coating
- Thermoplastic PA 6 coated, black
- Thermoplastic PA 6 coated, clear
- PVC coated, green (transparent)
- Thermoplastic PA 6, grey
- Thermoplastic PUR, black

Attaching ring
- Stainless steel

Holding clip
- Stainless Steel

Eyelet
- Stainless steel
- Brass, tin-plated

Press clamp
- Aluminium Al

Assembly

Mounting of the holding clips (picture 5/6) to the ball lock pin with a soft-face mallet. Disassemble via levering it with a screw driver. Thermoplastic version (picture 7): cut-off projecting ends without burr after being fastened.

More information

Notes

Customized design on request.
Models picture 3 and picture 4 correspond to MIL-DTL-83420.
Version picture 8 (spiral form) with very high working length.

Further products

- Retaining Cables, for threaded lock pin

chanhvinh.com

Drawing

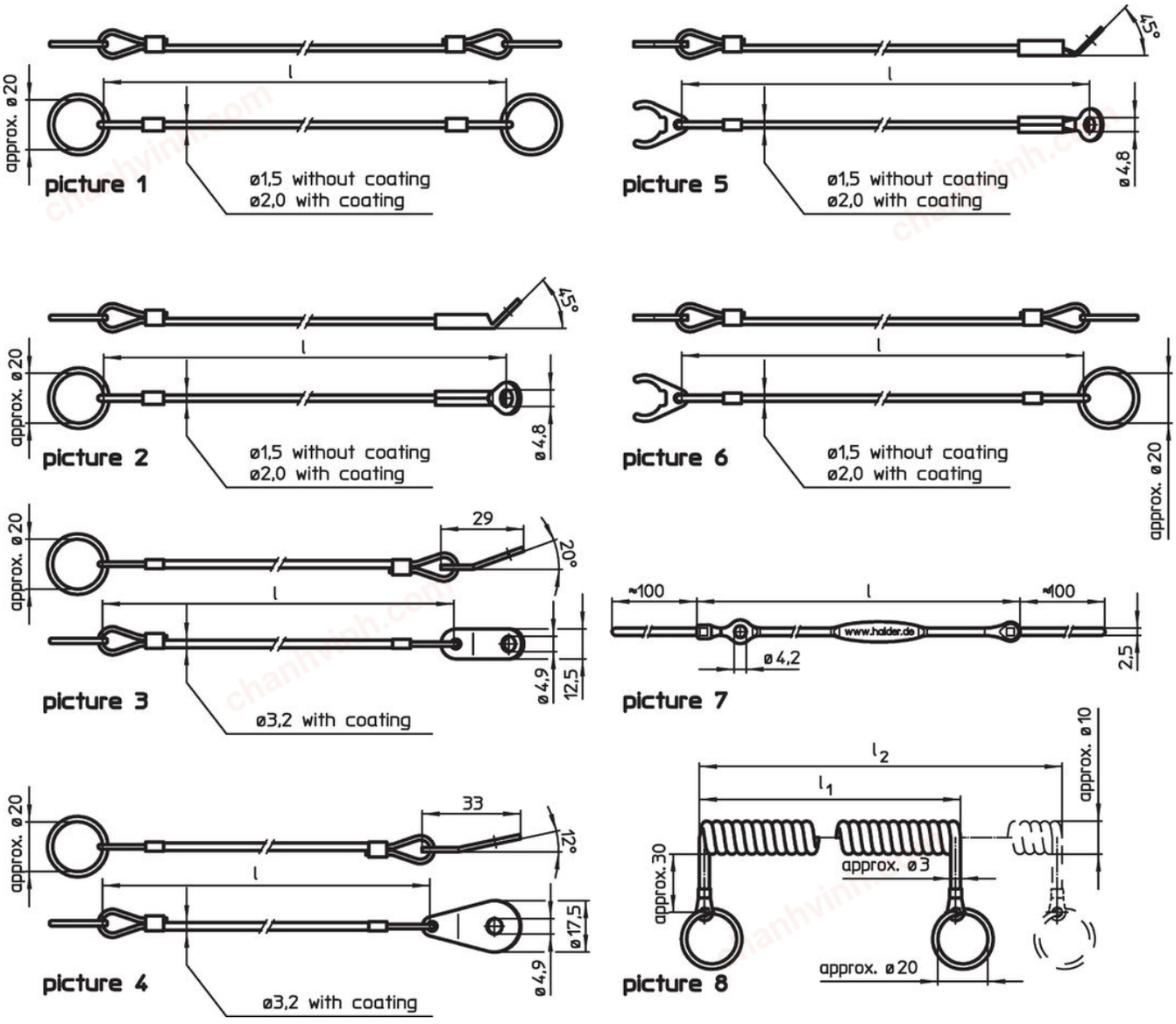

Order information

Dimensions			Suitable for size	max.		Art. No.
l	l_1	l_2 max.				
[mm]			[mm]	[°C]	[g]	
stainless steel, with 2 attaching rings – picture 1, Thermoplastic PA 6 coated, black						
150	–	–	–	80	7.8	22400.0940[1]
200	–	–	–	80	8.4	22400.0941[1]
300	–	–	–	80	9.1	22400.0943[1]
stainless steel, with attaching ring and eyelet – picture 2, Thermoplastic PA 6 coated, black						
150	–	–	–	80	7.7	22400.0945[1]
200	–	–	–	80	7.5	22400.0946[1]
300	–	–	–	80	8.6	22400.0948[1]
stainless steel, with 2 attaching rings – picture 1, Thermoplastic PA 6 coated, clear						
150	–	–	–	80	7.8	22400.0950[1]
200	–	–	–	80	8.5	22400.0952[1]
300	–	–	–	80	7.7	22400.0956[1]

[1] not for ball lock pins, basic type

[2] for ball lock pins, basic type

chanhvinh.com

Dimensions			Suitable for size	max.		Art. No.
l	l_1	l_2 max.				
[mm]			[mm]	[°C]	[g]	
stainless steel, with attaching ring and eyelet – picture 2, Thermoplastic PA 6 coated, clear						
150	–	–	–	80	7.8	22400.0960[1]
200	–	–	–	80	7.6	22400.0962[1]
300	–	–	–	80	8.9	22400.0966[1]
stainless steel, with 2 attaching rings – picture 1, Without coating						
150	–	–	–	250	7.4	22400.0930[1]
200	–	–	–	250	7.9	22400.0931[1]
300	–	–	–	250	8.9	22400.0933[1]
stainless steel, with attaching ring and eyelet – picture 2, Without coating						
150	–	–	–	250	7.1	22400.0935[1]
200	–	–	–	250	7.0	22400.0936[1]
300	–	–	–	250	8.0	22400.0938[1]
stainless steel, with fixing tab, rectangular and attaching ring – picture 3, PVC coated, green (transparent)						
150	–	–	–	80	11.0	22400.1301[1]
200	–	–	–	80	12.0	22400.1302[1]
300	–	–	–	80	14.0	22400.1303[1]
stainless steel, with fixing tab in drop shape and attaching ring – picture 4, PVC coated, green (transparent)						
150	–	–	–	80	11.0	22400.1311[1]
200	–	–	–	80	12.0	22400.1312[1]
300	–	–	–	80	14.0	22400.1313[1]
stainless steel, with holding clip and eyelet – picture 5, Thermoplastic PA 6 coated, clear						
150	–	–	5/ 6	80	6.1	22400.1001[2]
150	–	–	8/10	80	7.0	22400.1021[2]
150	–	–	12/16	80	8.2	22400.1041[2]
150	–	–	20/25	80	11.0	22400.1061[2]
200	–	–	5/ 6	80	6.8	22400.1002[2]
200	–	–	8/10	80	7.6	22400.1022[2]
200	–	–	12/16	80	8.8	22400.1042[2]
200	–	–	20/25	80	12.0	22400.1062[2]
300	–	–	5/ 6	80	8.0	22400.1003[2]
300	–	–	8/10	80	8.9	22400.1023[2]
300	–	–	12/16	80	10.0	22400.1043[2]
300	–	–	20/25	80	13.0	22400.1063[2]
stainless steel, with holding clip and eyelet – picture 5, Thermoplastic PA 6 coated, black						
150	–	–	5/ 6	80	6.2	22400.1101[2]
150	–	–	8/10	80	7.1	22400.1121[2]
150	–	–	12/16	80	8.2	22400.1141[2]
150	–	–	20/25	80	11.0	22400.1161[2]
200	–	–	5/ 6	80	6.8	22400.1102[2]
200	–	–	8/10	80	7.7	22400.1122[2]
200	–	–	12/16	80	8.9	22400.1142[2]
200	–	–	20/25	80	12.0	22400.1162[2]
300	–	–	5/ 6	80	8.0	22400.1103[2]
300	–	–	8/10	80	8.9	22400.1123[2]
300	–	–	12/16	80	10.0	22400.1143[2]
300	–	–	20/25	80	13.0	22400.1163[2]
stainless steel, with holding clip and eyelet – picture 5, Without coating						
150	–	–	5/ 6	250	7.1	22400.1201[2]
150	–	–	8/10	250	6.7	22400.1221[2]
150	–	–	12/16	250	7.9	22400.1241[2]
150	–	–	20/25	250	11.0	22400.1261[2]

[1] not for ball lock pins, basic type

[2] for ball lock pins, basic type

chanhvinh.com

Dimensions			Suitable for size	max.		Art. No.
l	l_1	l_2 max.				
[mm]			[mm]	[°C]	[g]	
200	–	–	5/ 6	250	6.3	22400.1202[2]
200	–	–	8/10	250	7.2	22400.1222[2]
200	–	–	12/16	250	8.4	22400.1242[2]
200	–	–	20/25	250	11.0	22400.1262[2]
300	–	–	5/ 6	250	7.3	22400.1203[2]
300	–	–	8/10	250	8.2	22400.1223[2]
300	–	–	12/16	250	9.5	22400.1243[2]
300	–	–	20/25	250	13.0	22400.1263[2]
stainless steel, with holding clip and attaching ring – picture 6, Thermoplastic PA 6 coated, clear						
150	–	–	5/ 6	80	6.3	22400.1011[2]
150	–	–	8/10	80	7.2	22400.1031[2]
150	–	–	12/16	80	8.4	22400.1051[2]
150	–	–	20/25	80	11.0	22400.1071[2]
200	–	–	5/ 6	80	6.9	22400.1012[2]
200	–	–	8/10	80	7.8	22400.1032[2]
200	–	–	12/16	80	9.0	22400.1052[2]
200	–	–	20/25	80	12.0	22400.1072[2]
300	–	–	5/ 6	80	8.2	22400.1013[2]
300	–	–	8/10	80	9.0	22400.1033[2]
300	–	–	12/16	80	10.0	22400.1053[2]
300	–	–	20/25	80	13.0	22400.1073[2]
stainless steel, with holding clip and attaching ring – picture 6, Thermoplastic PA 6 coated, black						
150	–	–	5/ 6	80	6.3	22400.1111[2]
150	–	–	8/10	80	7.3	22400.1131[2]
150	–	–	12/16	80	8.4	22400.1151[2]
150	–	–	20/25	80	11.0	22400.1171[2]
200	–	–	5/ 6	80	7.0	22400.1112[2]
200	–	–	8/10	80	7.8	22400.1132[2]
200	–	–	12/16	80	9.0	22400.1152[2]
200	–	–	20/25	80	12.0	22400.1172[2]
300	–	–	5/ 6	80	8.2	22400.1113[2]
300	–	–	8/10	80	9.0	22400.1133[2]
300	–	–	12/16	80	10.0	22400.1153[2]
300	–	–	20/25	80	13.0	22400.1173[2]
stainless steel, with holding clip and attaching ring – picture 6, Without coating						
150	–	–	5/ 6	250	5.9	22400.1211[2]
150	–	–	8/10	250	6.8	22400.1231[2]
150	–	–	12/16	250	8.0	22400.1251[2]
150	–	–	20/25	250	11.0	22400.1271[2]
200	–	–	5/ 6	250	6.4	22400.1212[2]
200	–	–	8/10	250	7.3	22400.1232[2]
200	–	–	12/16	250	8.5	22400.1252[2]
200	–	–	20/25	250	12.0	22400.1272[2]
300	–	–	5/ 6	250	7.4	22400.1213[2]
300	–	–	8/10	250	8.6	22400.1233[2]
300	–	–	12/16	250	9.5	22400.1253[2]
300	–	–	20/25	250	13.0	22400.1273[2]

[1] not for ball lock pins, basic type

[2] for ball lock pins, basic type

chanhvinh.com

Dimensions			Suitable for size	max.		Art. No.
l	l_1	l_2 max.				
[mm]			[mm]	[°C]	[g]	
with double sided clamping/indexing mechanism – picture 7, Thermoplastic PA 6, grey						
150	–	–	–	80	1.9	22400.0970
250	–	–	–	80	2.5	22400.0974
spiral form, with attaching rings – picture 8, Thermoplastic PUR, black						
–	**100**	**600**	–	80	15.0	22400.0980[1)]
–	**200**	**1200**	–	80	16.0	22400.0982[1)]

[1)] not for ball lock pins, basic type

[2)] for ball lock pins, basic type

chanhvinh.com

Application example

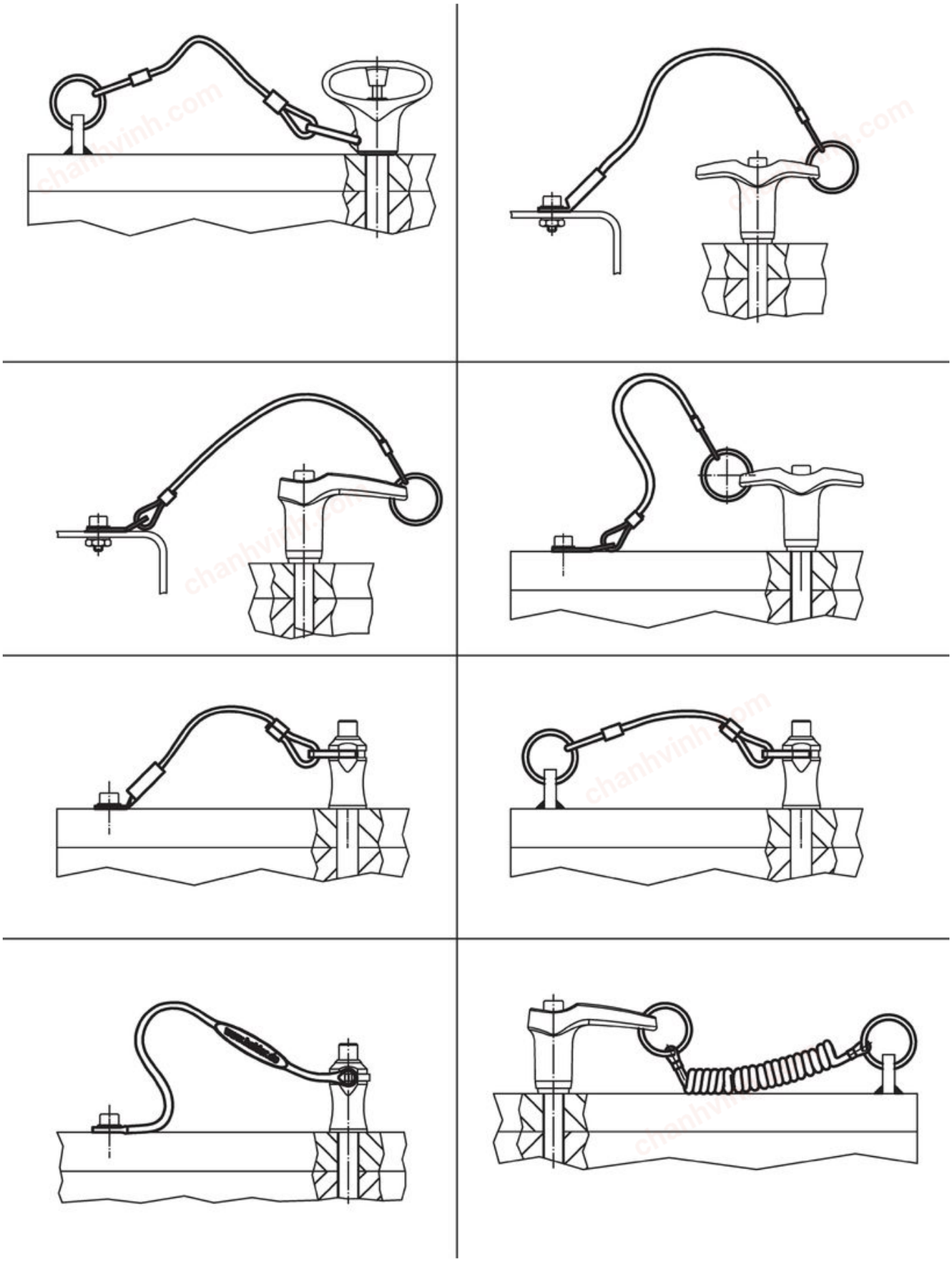

Compliance

For detailed compliance information please select the desired article number.