chanhvinh.com

Locating Bushings • for ball lock pins and socket pins
EH 22400.



Product Description

The version with face hole (picture 2) is suitable for applications requiring a flush surface when screwed in.
Locating bushings are used for quick and safe locating of ball lock pins EH 22340., EH 22350., EH 22370. and EH 22380. and socket pins EH 22400.
Optimised centering due to precise collar (e.g. quick mounting of plates and components).
All versions are corrosion and abrasion resistant.

Material

- Stainless steel 1.4305

Assembly

This version with face hole (picture 2) can be installed via a cranked pin face wrench or alternatively via a pin faced socket wrench. Easy and process-reliable installation. Suitable for installation in a variety of carrier materials. Can also be used in thin-walled pieces. Application from both sides.

More information

References

Assembly tool face wrench or adjustable face wrench, offset refer to EH 22350.

Further products

- Face Wrench (socket wrench insert)
- Adjustable Face Wrench, offset

Drawing

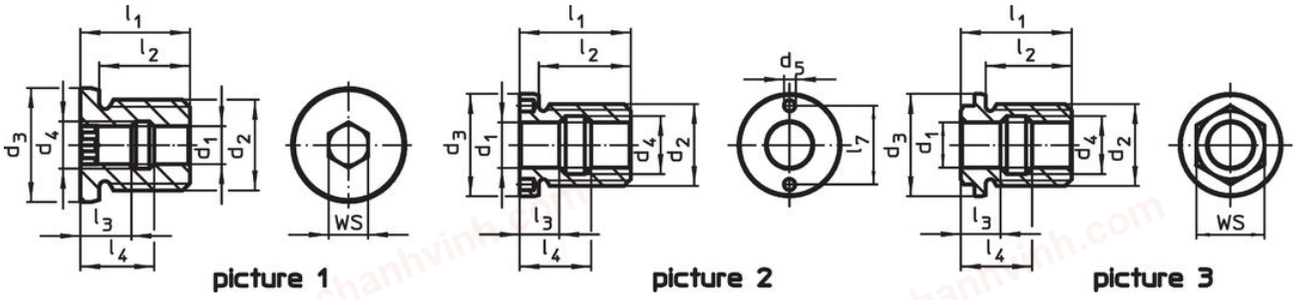

Order information

Dimensions												WS		Art. No.
d_1 H11	d_2	d_3 h9	d_4	d_5 +0.1	l_1	l_2	l_3	l_4	l_5	l_6	l_7	[mm]	[g]	
with internal hexagon – picture 1														
5	**M12**	18	6.0	–	19	15	9.0	13.0	5.1	9.0	–	5	15	22400.0905
6	**M12**	18	7.5	–	19	15	9.4	13.0	5.6	8.8	–	6	15	22400.0906
8	**M16**	22	10.0	–	25	20	12.0	17.0	7.3	11.7	–	8	29	22400.0908
10	**M24**	30	12.5	–	29	24	13.5	19.5	8.9	14.1	–	10	76	22400.0910
12	**M24**	30	15.0	–	29	24	14.0	20.0	9.6	14.4	–	12	66	22400.0912
plain, with face hole – picture 2														
16	**M30**	39	19.5	5.1	39	33	15.5	23.5	10.4	16.6	30	–	136	22400.0925
20	**M36**	43	25.5	5.1	49	42	17.5	31.5	11.9	23.1	30	–	364	22400.0926
25	**M42**	50	32.0	5.1	65	57	26.5	38.5	13.3	21.8	36	–	350	22400.0927
with outer hexagon – picture 3														
16	**M30**	36	19.5	–	39	29	15.5	23.5	6.1	12.8	–	24	124	22400.0916
20	**M36**	45	25.5	–	49	38	17.5	31.5	7.7	19.3	–	30	208	22400.0920
25	**M42**	50	32.0	–	65	50	26.5	38.5	13.3	21.8	–	36	350	22400.0924

chanhvinh.com

Application example

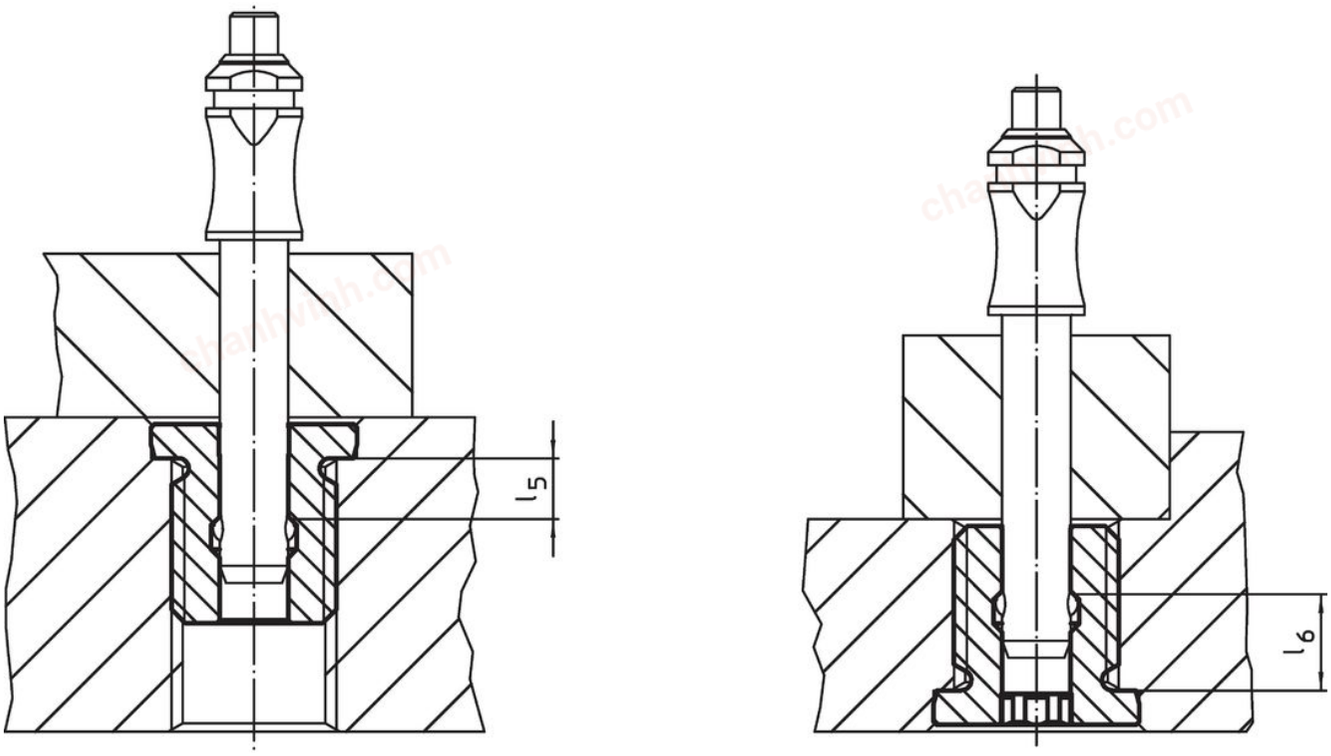

Compliance

RoHS-compliant
Compliant with Directive 2011/65/EU [RoHS].

Does not contain SVHC substances
No SVHC substances with more than 0.1% w/w contained - SVHC list [REACH] as of 04.02.2026.

SCIP-code
N/A

Contains Proposition 65 substances
Nickel can cause cancer from exposure.
https://www.P65Warnings.ca.gov/

Free from Conflict Minerals
This product does not contain any substances designated as "conflict minerals" such as tantalum, tin, gold or tungsten from the Democratic Republic of Congo or adjacent countries.

POP-compliant
Contains no persistent organic pollutants – Stockholm Convention [POP] as of September 2025.

PFAS-compliant
Contains no per- and polyfluoroalkyl substances (PFAS).

TSCA-compliant
Agent concentration in this product does not exceed the specified threshold.