chanhvinh.com

Socket Pins • with spring-loaded balls
EH 22400.



Product Description

For quick fastening, locking, adjusting, changing and securing. Quickly and easily unlockable for frequently repeated connections.
All versions are corrosion resistant.
Version with ergonomic grip.

Material

Pin part
- Stainless steel 1.4305

Handle
- Thermoplastic PA 6, grey

Spring
- Stainless steel

More information

Notes

Security note: balls are spring-loaded and not locked as in article groups EH 22340., EH 22350., EH 22360., EH 22370. and EH 22380.

Accessories

Can easily be fitted with retaining cable EH 22400.

Further products

- Locating Bushings, for ball lock pins and socket pins
- Locating Bushings, with flange, for ball lock pins and socket pins
- Retaining Cables
- Positioning Bushings, with collar, DIN 172 A
- Positioning Bushings, without collar, DIN 179 A

Drawing

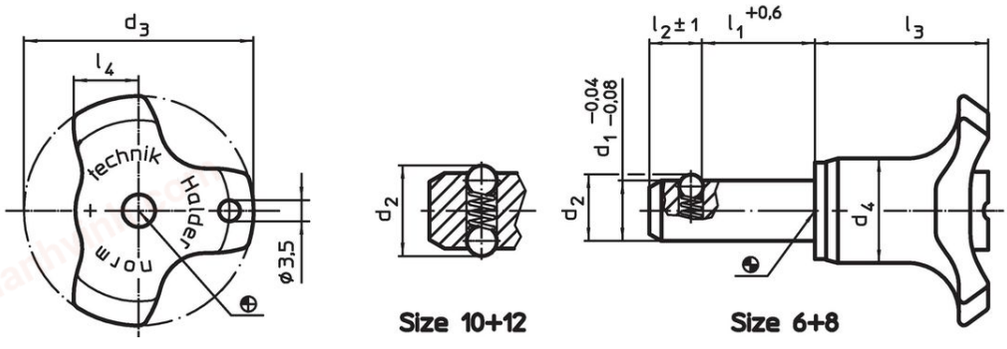

Order information

Dimensions								Location hole H11	Shearing resistance, two-shear	Tensile force max. unlubricated				Art. No.
d_1 -0.04 -0.08	l_1 +0.6	d_2	d_3	d_4	l_2 ±1	l_3	l_4				min.	max.		
[mm]								[mm]	[kN]	[N]	[°C]		[g]	
6	**10**	6.5	38	17.3	5.0	27.0	10.8	6	22	8	-30	80	16	22400.0062
6	**15**	6.5	38	17.3	5.0	27.0	10.8	6	22	8	-30	80	17	22400.0064
6	**20**	6.5	38	17.3	5.0	27.0	10.8	6	22	8	-30	80	18	22400.0066
6	**25**	6.5	38	17.3	5.0	27.0	10.8	6	22	8	-30	80	19	22400.0068
6	**30**	6.5	38	17.3	5.0	27.0	10.8	6	22	8	-30	80	20	22400.0070
6	**50**	6.5	38	17.3	5.0	27.0	10.8	6	22	8	-30	80	24	22400.0075
8	**15**	8.7	38	17.3	6.3	28.6	10.8	8	40	15	-30	80	21	22400.0084
8	**20**	8.7	38	17.3	6.3	28.6	10.8	8	40	15	-30	80	23	22400.0086
8	**25**	8.7	38	17.3	6.3	28.6	10.8	8	40	15	-30	80	25	22400.0088
8	**30**	8.7	38	17.3	6.3	28.6	10.8	8	40	15	-30	80	27	22400.0090
8	**50**	8.7	38	17.3	6.3	28.6	10.8	8	40	15	-30	80	35	22400.0095
10	**15**	12.0	38	17.3	8.7	28.6	10.8	10	62	30	-30	80	30	22400.0104
10	**20**	12.0	38	17.3	8.7	28.6	10.8	10	62	30	-30	80	34	22400.0106
10	**25**	12.0	38	17.3	8.7	28.6	10.8	10	62	30	-30	80	37	22400.0108

chanhvinh.com

Dimensions								Location hole H11	Shearing resistance, two-shear	Tensile force max. unlubricated				Art. No.
d_1 -0.04 -0.08	l_1 +0.6	d_2	d_3	d_4	l_2 ±1	l_3	l_4				min.	max.		
[mm]								[mm]	[kN]	[N]	[°C]		[g]	
10	**30**	12.0	38	17.3	8.7	28.6	10.8	10	62	30	-30	80	40	22400.0110
10	**50**	12.0	38	17.3	8.7	28.6	10.8	10	62	30	-30	80	52	22400.0115
12	**20**	14.5	38	17.3	9.5	28.6	10.8	12	90	32	-30	80	42	22400.0122
12	**30**	14.5	38	17.3	9.5	28.6	10.8	12	90	32	-30	80	51	22400.0124
12	**40**	14.5	38	17.3	9.5	28.6	10.8	12	90	32	-30	80	60	22400.0126
12	**50**	14.5	38	17.3	9.5	28.6	10.8	12	90	32	-30	80	68	22400.0128

Application example

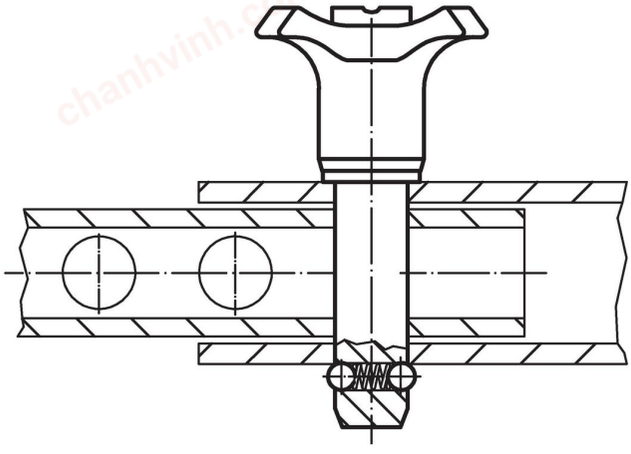

Compliance

RoHS-compliant
Compliant with Directive 2011/65/EU [RoHS].

Does not contain SVHC substances
No SVHC substances with more than 0.1% w/w contained - SVHC list [REACH] as of 04.02.2026.

SCIP-code
N/A

Contains Proposition 65 substances
Nickel can cause cancer from exposure.
https://www.P65Warnings.ca.gov/

Free from Conflict Minerals
This product does not contain any substances designated as "conflict minerals" such as tantalum, tin, gold or tungsten from the Democratic Republic of Congo or adjacent countries.

POP-compliant
Contains no persistent organic pollutants – Stockholm Convention [POP] as of September 2025.

PFAS-compliant
Contains no per- and polyfluoroalkyl substances (PFAS).

TSCA-compliant
Agent concentration in this product does not exceed the specified threshold.