chanhvinh.com

Ball Lock Pins • self-locking, with combination handle, precipitation-hardened
EH 22380.



Product Description

For quick fastening, locking, adjusting, changing and securing. Quickly and easily unlockable for frequently repeated connections.
All versions are corrosion resistant. When using stainless steel 1.4542: high-strength, hardened, abrasion resistant pin with high load capacity.
Ergonomic grip, different colour combinations. The grip design provides protection of unintentional unlocking.

Material

Pin part
- Stainless steel 1.4542, precipitation-hardened

Handle
- Thermoplastic PA 6 grey / orange
- Thermoplastic PA 6 grey / grey
- Thermoplastic PA 6 grey / blue
- Thermoplastic PA 6 black / black

Spring
- Stainless steel

Operation

The balls are unlocked by pressing the button.

Characteristic

Types from stainless steel 1.4542 with marking below the balls.

More information

Notes

Customized design on request.

References

Stainless steel 1.4305, see EH 22370.

Accessories

Can easily be fitted with retaining cable EH 22400.

Further products

- Ball Lock Pins, self-locking, with combination handle
- Locating Bushings, for ball lock pins and socket pins
- Locating Bushings, with flange, for ball lock pins and socket pins
- Retaining Cables
- Positioning Bushings, with collar, DIN 172 A
- Positioning Bushings, without collar, DIN 179 A

Drawing

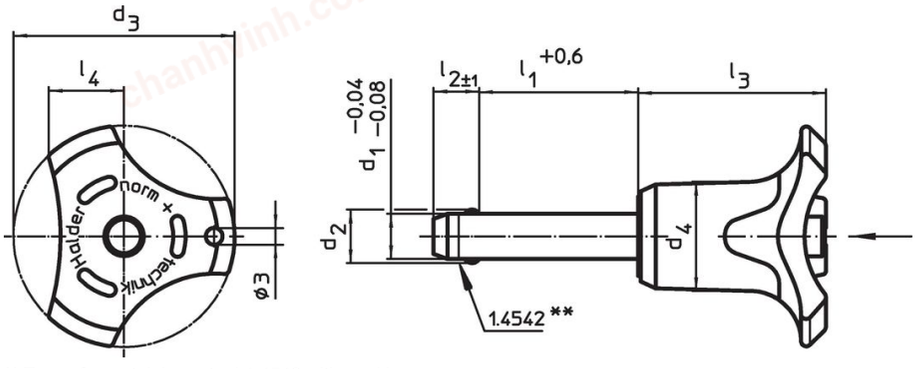

** Types from stainless steel 1.4542 with marking.

chanhvinh.com

Order information

Dimensions								Location hole H11	Shearing resistance, two-shear[1] min.				Art. No.
d_1 -0.04 -0.08	l_1 +0.6	d_2	d_3	d_4	l_2 ±1	l_3	l_4			min.	max.		
[mm]								[mm]	[kN]	[°C]		[g]	
Handle colour: orange													
5	**10**	5.5	33.2	14.5	6.0	26.7	10.8	5	24	-30	80	15	22380.0152
5	**15**	5.5	33.2	14.5	6.0	26.7	10.8	5	24	-30	80	15	22380.0153
5	**20**	5.5	33.2	14.5	6.0	26.7	10.8	5	24	-30	80	16	22380.0154
5	**25**	5.5	33.2	14.5	6.0	26.7	10.8	5	24	-30	80	17	22380.0155
5	**30**	5.5	33.2	14.5	6.0	26.7	10.8	5	24	-30	80	18	22380.0156
5	**35**	5.5	33.2	14.5	6.0	26.7	10.8	5	24	-30	80	19	22380.0145
5	**40**	5.5	33.2	14.5	6.0	26.7	10.8	5	24	-30	80	20	22380.0146
5	**45**	5.5	33.2	14.5	6.0	26.7	10.8	5	24	-30	80	21	22380.0147
5	**50**	5.5	33.2	14.5	6.0	26.7	10.8	5	24	-30	80	23	22380.0148
5	**60**	5.5	33.2	14.5	6.0	26.7	10.8	5	24	-30	80	24	22380.0149
5	**70**	5.5	33.2	14.5	6.0	26.7	10.8	5	24	-30	80	18	22380.0150
5	**80**	5.5	33.2	14.5	6.0	26.7	10.8	5	24	-30	80	19	22380.0151
6	**10**	7.0	33.2	14.5	7.0	26.7	10.8	6	35	-30	80	16	22380.0162
6	**15**	7.0	33.2	14.5	7.0	26.7	10.8	6	35	-30	80	12	22380.0163
6	**20**	7.0	33.2	14.5	7.0	26.7	10.8	6	35	-30	80	18	22380.0164
6	**25**	7.0	33.2	14.5	7.0	26.7	10.8	6	35	-30	80	19	22380.0165
6	**30**	7.0	33.2	14.5	7.0	26.7	10.8	6	35	-30	80	20	22380.0166
6	**35**	7.0	33.2	14.5	7.0	26.7	10.8	6	35	-30	80	21	22380.0167
6	**40**	7.0	33.2	14.5	7.0	26.7	10.8	6	35	-30	80	22	22380.0168
6	**45**	7.0	33.2	14.5	7.0	26.7	10.8	6	35	-30	80	23	22380.0169
6	**50**	7.0	33.2	14.5	7.0	26.7	10.8	6	35	-30	80	24	22380.0170
6	**60**	7.0	33.2	14.5	7.0	26.7	10.8	6	35	-30	80	26	22380.0157
6	**70**	7.0	33.2	14.5	7.0	26.7	10.8	6	35	-30	80	28	22380.0158
6	**80**	7.0	33.2	14.5	7.0	26.7	10.8	6	35	-30	80	30	22380.0159
8	**10**	9.5	39.2	18.4	8.2	33.3	13.4	8	63	-30	80	38	22380.0172
8	**15**	9.5	39.2	18.4	8.2	33.3	13.4	8	63	-30	80	58	22380.0173
8	**20**	9.5	39.2	18.4	8.2	33.3	13.4	8	63	-30	80	40	22380.0174
8	**25**	9.5	39.2	18.4	8.2	33.3	13.4	8	63	-30	80	42	22380.0175
8	**30**	9.5	39.2	18.4	8.2	33.3	13.4	8	63	-30	80	42	22380.0176
8	**35**	9.5	39.2	18.4	8.2	33.3	13.4	8	63	-30	80	46	22380.0177
8	**40**	9.5	39.2	18.4	8.2	33.3	13.4	8	63	-30	80	47	22380.0178
8	**45**	9.5	39.2	18.4	8.2	33.3	13.4	8	63	-30	80	49	22380.0179
8	**50**	9.5	39.2	18.4	8.2	33.3	13.4	8	63	-30	80	51	22380.0180
8	**60**	9.5	39.2	18.4	8.2	33.3	13.4	8	63	-30	80	62	22380.0181
8	**70**	9.5	39.2	18.4	8.2	33.3	13.4	8	63	-30	80	65	22380.0182
8	**80**	9.5	39.2	18.4	8.2	33.3	13.4	8	63	-30	80	69	22380.0183
8	**90**	9.5	39.2	18.4	8.2	33.3	13.4	8	63	-30	80	36	22380.0171
8	**100**	9.5	39.2	18.4	8.2	33.3	13.4	8	63	-30	80	54	22380.0161
10	**15**	12.0	39.2	18.4	9.6	33.3	13.4	10	100	-30	80	86	22380.0191
10	**20**	12.0	39.2	18.4	9.6	33.3	13.4	10	100	-30	80	47	22380.0184
10	**25**	12.0	39.2	18.4	9.6	33.3	13.4	10	100	-30	80	49	22380.0185
10	**30**	12.0	39.2	18.4	9.6	33.3	13.4	10	100	-30	80	53	22380.0186
10	**35**	12.0	39.2	18.4	9.6	33.3	13.4	10	100	-30	80	55	22380.0187
10	**40**	12.0	39.2	18.4	9.6	33.3	13.4	10	100	-30	80	58	22380.0188
10	**45**	12.0	39.2	18.4	9.6	33.3	13.4	10	100	-30	80	61	22380.0189
10	**50**	12.0	39.2	18.4	9.6	33.3	13.4	10	100	-30	80	64	22380.0190
10	**60**	12.0	39.2	18.4	9.6	33.3	13.4	10	100	-30	80	70	22380.0192
10	**70**	12.0	39.2	18.4	9.6	33.3	13.4	10	100	-30	80	91	22380.0193
10	**80**	12.0	39.2	18.4	9.6	33.3	13.4	10	100	-30	80	97	22380.0194
10	**90**	12.0	39.2	18.4	9.6	33.3	13.4	10	100	-30	80	103	22380.0195
10	**100**	12.0	39.2	18.4	9.6	33.3	13.4	10	100	-30	80	109	22380.0196
10	**110**	12.0	39.2	18.4	9.6	33.3	13.4	10	100	-30	80	115	22380.0197
10	**120**	12.0	39.2	18.4	9.6	33.3	13.4	10	100	-30	80	53	22380.0198
12	**20**	14.5	47.6	25.2	10.6	39.7	16.7	12	144	-30	80	156	22380.0204
12	**25**	14.5	47.6	25.2	10.6	39.7	16.7	12	144	-30	80	96	22380.0205

[1] Shearing resistance similar to DIN 50141

chanhvinh.com

Dimensions								Location hole H11	Shearing resistance, two-shear[1] min.	min.	max.		Art. No.
d_1 -0.04 -0.08	l_1 +0.6	d_2	d_3	d_4	l_2 ±1	l_3	l_4						
[mm]								[mm]	[kN]	[°C]		[g]	
12	**30**	14.5	47.6	25.2	10.6	39.7	16.7	12	144	-30	80	100	22380.0206
12	**35**	14.5	47.6	25.2	10.6	39.7	16.7	12	144	-30	80	105	22380.0207
12	**40**	14.5	47.6	25.2	10.6	39.7	16.7	12	144	-30	80	109	22380.0208
12	**45**	14.5	47.6	25.2	10.6	39.7	16.7	12	144	-30	80	113	22380.0209
12	**50**	14.5	47.6	25.2	10.6	39.7	16.7	12	144	-30	80	117	22380.0210
12	**60**	14.5	47.6	25.2	10.6	39.7	16.7	12	144	-30	80	126	22380.0212
12	**70**	14.5	47.6	25.2	10.6	39.7	16.7	12	144	-30	80	134	22380.0214
12	**80**	14.5	47.6	25.2	10.6	39.7	16.7	12	144	-30	80	143	22380.0216
12	**90**	14.5	47.6	25.2	10.6	39.7	16.7	12	144	-30	80	165	22380.0217
12	**100**	14.5	47.6	25.2	10.6	39.7	16.7	12	144	-30	80	173	22380.0218
12	**110**	14.5	47.6	25.2	10.6	39.7	16.7	12	144	-30	80	182	22380.0219
12	**120**	14.5	47.6	25.2	10.6	39.7	16.7	12	144	-30	80	177	22380.0220
16	**30**	19.0	47.6	25.2	14.0	39.7	16.7	16	257	-30	80	132	22380.0226
16	**35**	19.0	47.6	25.2	14.0	39.7	16.7	16	257	-30	80	140	22380.0227
16	**40**	19.0	47.6	25.2	14.0	39.7	16.7	16	257	-30	80	148	22380.0228
16	**45**	19.0	47.6	25.2	14.0	39.7	16.7	16	257	-30	80	155	22380.0229
16	**50**	19.0	47.6	25.2	14.0	39.7	16.7	16	257	-30	80	168	22380.0230
16	**60**	19.0	47.6	25.2	14.0	39.7	16.7	16	257	-30	80	178	22380.0232
16	**70**	19.0	47.6	25.2	14.0	39.7	16.7	16	257	-30	80	194	22380.0234
16	**80**	19.0	47.6	25.2	14.0	39.7	16.7	16	257	-30	80	208	22380.0236
16	**90**	19.0	47.6	25.2	14.0	39.7	16.7	16	257	-30	80	234	22380.0237
16	**100**	19.0	47.6	25.2	14.0	39.7	16.7	16	257	-30	80	251	22380.0238
16	**110**	19.0	47.6	25.2	14.0	39.7	16.7	16	257	-30	80	266	22380.0239
16	**120**	19.0	47.6	25.2	14.0	39.7	16.7	16	257	-30	80	281	22380.0240
16	**130**	19.0	47.6	25.2	14.0	39.7	16.7	16	257	-30	80	297	22380.0241
16	**140**	19.0	47.6	25.2	14.0	39.7	16.7	16	257	-30	80	313	22380.0242
16	**150**	19.0	47.6	25.2	14.0	39.7	16.7	16	257	-30	80	328	22380.0243
20	**50**	25.0	57.1	33.8	20.5	50.7	21.5	20	403	-30	80	329	22380.0251
20	**60**	25.0	57.1	33.8	20.5	50.7	21.5	20	403	-30	80	343	22380.0252
20	**70**	25.0	57.1	33.8	20.5	50.7	21.5	20	403	-30	80	377	22380.0253
20	**80**	25.0	57.1	33.8	20.5	50.7	21.5	20	403	-30	80	392	22380.0256
20	**90**	25.0	57.1	33.8	20.5	50.7	21.5	20	403	-30	80	426	22380.0257
20	**100**	25.0	57.1	33.8	20.5	50.7	21.5	20	403	-30	80	440	22380.0260
20	**110**	25.0	57.1	33.8	20.5	50.7	21.5	20	403	-30	80	474	22380.0261
20	**120**	25.0	57.1	33.8	20.5	50.7	21.5	20	403	-30	80	488	22380.0264
20	**130**	25.0	57.1	33.8	20.5	50.7	21.5	20	403	-30	80	523	22380.0265
20	**140**	25.0	57.1	33.8	20.5	50.7	21.5	20	403	-30	80	546	22380.0266
20	**150**	25.0	57.1	33.8	20.5	50.7	21.5	20	403	-30	80	571	22380.0267
25	**50**	30.8	57.1	33.8	22.0	50.7	21.5	25	631	-30	80	425	22380.0269
25	**60**	30.8	57.1	33.8	22.0	50.7	21.5	25	631	-30	80	457	22380.0270
25	**70**	30.8	57.1	33.8	22.0	50.7	21.5	25	631	-30	80	490	22380.0271
25	**80**	30.8	57.1	33.8	22.0	50.7	21.5	25	631	-30	80	540	22380.0272
25	**90**	30.8	57.1	33.8	22.0	50.7	21.5	25	631	-30	80	573	22380.0273
25	**100**	30.8	57.1	33.8	22.0	50.7	21.5	25	631	-30	80	605	22380.0274
25	**110**	30.8	57.1	33.8	22.0	50.7	21.5	25	631	-30	80	640	22380.0275
25	**120**	30.8	57.1	33.8	22.0	50.7	21.5	25	631	-30	80	683	22380.0276
25	**130**	30.8	57.1	33.8	22.0	50.7	21.5	25	631	-30	80	715	22380.0277
25	**140**	30.8	57.1	33.8	22.0	50.7	21.5	25	631	-30	80	753	22380.0278
25	**150**	30.8	57.1	33.8	22.0	50.7	21.5	25	631	-30	80	790	22380.0279
Handle colour: grey													
5	**10**	5.5	33.2	14.5	6.0	26.7	10.8	5	24	-30	80	15	22380.0292
5	**15**	5.5	33.2	14.5	6.0	26.7	10.8	5	24	-30	80	15	22380.0293
5	**20**	5.5	33.2	14.5	6.0	26.7	10.8	5	24	-30	80	16	22380.0294
5	**25**	5.5	33.2	14.5	6.0	26.7	10.8	5	24	-30	80	17	22380.0295
5	**30**	5.5	33.2	14.5	6.0	26.7	10.8	5	24	-30	80	18	22380.0296
5	**35**	5.5	33.2	14.5	6.0	26.7	10.8	5	24	-30	80	19	22380.0285
5	**40**	5.5	33.2	14.5	6.0	26.7	10.8	5	24	-30	80	20	22380.0286
5	**45**	5.5	33.2	14.5	6.0	26.7	10.8	5	24	-30	80	21	22380.0287

[1] Shearing resistance similar to DIN 50141

chanhvinh.com

Dimensions								Location hole H11	Shearing resistance, two-shear[1] min.	min.	max.		Art. No.
d_1 -0.04 -0.08	l_1 +0.6	d_2	d_3	d_4	l_2 ±1	l_3	l_4						
[mm]								[mm]	[kN]	[°C]		[g]	
5	50	5.5	33.2	14.5	6.0	26.7	10.8	5	24	-30	80	23	22380.0288
5	60	5.5	33.2	14.5	6.0	26.7	10.8	5	24	-30	80	24	22380.0289
5	70	5.5	33.2	14.5	6.0	26.7	10.8	5	24	-30	80	18	22380.0290
5	80	5.5	33.2	14.5	6.0	26.7	10.8	5	24	-30	80	19	22380.0291
6	10	7.0	33.2	14.5	7.0	26.7	10.8	6	35	-30	80	16	22380.0302
6	15	7.0	33.2	14.5	7.0	26.7	10.8	6	35	-30	80	17	22380.0303
6	20	7.0	33.2	14.5	7.0	26.7	10.8	6	35	-30	80	18	22380.0304
6	25	7.0	33.2	14.5	7.0	26.7	10.8	6	35	-30	80	19	22380.0305
6	30	7.0	33.2	14.5	7.0	26.7	10.8	6	35	-30	80	20	22380.0306
6	35	7.0	33.2	14.5	7.0	26.7	10.8	6	35	-30	80	21	22380.0307
6	40	7.0	33.2	14.5	7.0	26.7	10.8	6	35	-30	80	22	22380.0308
6	45	7.0	33.2	14.5	7.0	26.7	10.8	6	35	-30	80	23	22380.0309
6	50	7.0	33.2	14.5	7.0	26.7	10.8	6	35	-30	80	24	22380.0310
6	60	7.0	33.2	14.5	7.0	26.7	10.8	6	35	-30	80	26	22380.0297
6	70	7.0	33.2	14.5	7.0	26.7	10.8	6	35	-30	80	28	22380.0298
6	80	7.0	33.2	14.5	7.0	26.7	10.8	6	35	-30	80	30	22380.0299
8	10	9.5	39.2	18.4	8.2	33.3	13.4	8	63	-30	80	38	22380.0312
8	15	9.5	39.2	18.4	8.2	33.3	13.4	8	63	-30	80	58	22380.0313
8	20	9.5	39.2	18.4	8.2	33.3	13.4	8	63	-30	80	40	22380.0314
8	25	9.5	39.2	18.4	8.2	33.3	13.4	8	63	-30	80	42	22380.0315
8	30	9.5	39.2	18.4	8.2	33.3	13.4	8	63	-30	80	44	22380.0316
8	35	9.5	39.2	18.4	8.2	33.3	13.4	8	63	-30	80	46	22380.0317
8	40	9.5	39.2	18.4	8.2	33.3	13.4	8	63	-30	80	47	22380.0318
8	45	9.5	39.2	18.4	8.2	33.3	13.4	8	63	-30	80	49	22380.0319
8	50	9.5	39.2	18.4	8.2	33.3	13.4	8	63	-30	80	51	22380.0320
8	60	9.5	39.2	18.4	8.2	33.3	13.4	8	63	-30	80	62	22380.0321
8	70	9.5	39.2	18.4	8.2	33.3	13.4	8	63	-30	80	65	22380.0322
8	80	9.5	39.2	18.4	8.2	33.3	13.4	8	63	-30	80	69	22380.0323
8	90	9.5	39.2	18.4	8.2	33.3	13.4	8	63	-30	80	36	22380.0311
8	100	9.5	39.2	18.4	8.2	33.3	13.4	8	63	-30	80	54	22380.0301
10	15	12.0	39.2	18.4	9.6	33.3	13.4	10	100	-30	80	86	22380.0331
10	20	12.0	39.2	18.4	9.6	33.3	13.4	10	100	-30	80	45	22380.0324
10	25	12.0	39.2	18.4	9.6	33.3	13.4	10	100	-30	80	49	22380.0325
10	30	12.0	39.2	18.4	9.6	33.3	13.4	10	100	-30	80	51	22380.0326
10	35	12.0	39.2	18.4	9.6	33.3	13.4	10	100	-30	80	55	22380.0327
10	40	12.0	39.2	18.4	9.6	33.3	13.4	10	100	-30	80	58	22380.0328
10	45	12.0	39.2	18.4	9.6	33.3	13.4	10	100	-30	80	61	22380.0329
10	50	12.0	39.2	18.4	9.6	33.3	13.4	10	100	-30	80	64	22380.0330
10	60	12.0	39.2	18.4	9.6	33.3	13.4	10	100	-30	80	70	22380.0332
10	70	12.0	39.2	18.4	9.6	33.3	13.4	10	100	-30	80	91	22380.0333
10	80	12.0	39.2	18.4	9.6	33.3	13.4	10	100	-30	80	97	22380.0334
10	90	12.0	39.2	18.4	9.6	33.3	13.4	10	100	-30	80	103	22380.0335
10	100	12.0	39.2	18.4	9.6	33.3	13.4	10	100	-30	80	109	22380.0336
10	110	12.0	39.2	18.4	9.6	33.3	13.4	10	100	-30	80	115	22380.0337
10	120	12.0	39.2	18.4	9.6	33.3	13.4	10	100	-30	80	53	22380.0338
12	20	14.5	47.6	25.2	10.6	39.7	16.7	12	144	-30	80	156	22380.0344
12	25	14.5	47.6	25.2	10.6	39.7	16.7	12	144	-30	80	96	22380.0345
12	30	14.5	47.6	25.2	10.6	39.7	16.7	12	144	-30	80	100	22380.0346
12	35	14.5	47.6	25.2	10.6	39.7	16.7	12	144	-30	80	105	22380.0347
12	40	14.5	47.6	25.2	10.6	39.7	16.7	12	144	-30	80	109	22380.0348
12	45	14.5	47.6	25.2	10.6	39.7	16.7	12	144	-30	80	113	22380.0349
12	50	14.5	47.6	25.2	10.6	39.7	16.7	12	144	-30	80	117	22380.0350
12	60	14.5	47.6	25.2	10.6	39.7	16.7	12	144	-30	80	126	22380.0352
12	70	14.5	47.6	25.2	10.6	39.7	16.7	12	144	-30	80	134	22380.0354
12	80	14.5	47.6	25.2	10.6	39.7	16.7	12	144	-30	80	143	22380.0356
12	90	14.5	47.6	25.2	10.6	39.7	16.7	12	144	-30	80	165	22380.0357
12	100	14.5	47.6	25.2	10.6	39.7	16.7	12	144	-30	80	173	22380.0358
12	110	14.5	47.6	25.2	10.6	39.7	16.7	12	144	-30	80	182	22380.0359
12	120	14.5	47.6	25.2	10.6	39.7	16.7	12	144	-30	80	177	22380.0360

[1] Shearing resistance similar to DIN 50141

chanhvinh.com

Dimensions								Location hole H11	Shearing resistance, two-shear[1] min.	min.	max.		Art. No.
d_1 -0.04 -0.08	l_1 +0.6	d_2	d_3	d_4	l_2 ±1	l_3	l_4						
[mm]								[mm]	[kN]	[°C]		[g]	
16	**30**	19.0	47.6	25.2	14.0	39.7	16.7	16	257	-30	80	132	22380.0366
16	**35**	19.0	47.6	25.2	14.0	39.7	16.7	16	257	-30	80	140	22380.0367
16	**40**	19.0	47.6	25.2	14.0	39.7	16.7	16	257	-30	80	148	22380.0368
16	**45**	19.0	47.6	25.2	14.0	39.7	16.7	16	257	-30	80	155	22380.0369
16	**50**	19.0	47.6	25.2	14.0	39.7	16.7	16	257	-30	80	168	22380.0370
16	**60**	19.0	47.6	25.2	14.0	39.7	16.7	16	257	-30	80	178	22380.0372
16	**70**	19.0	47.6	25.2	14.0	39.7	16.7	16	257	-30	80	194	22380.0374
16	**80**	19.0	47.6	25.2	14.0	39.7	16.7	16	257	-30	80	208	22380.0376
16	**90**	19.0	47.6	25.2	14.0	39.7	16.7	16	257	-30	80	234	22380.0377
16	**100**	19.0	47.6	25.2	14.0	39.7	16.7	16	257	-30	80	251	22380.0378
16	**110**	19.0	47.6	25.2	14.0	39.7	16.7	16	257	-30	80	266	22380.0379
16	**120**	19.0	47.6	25.2	14.0	39.7	16.7	16	257	-30	80	281	22380.0380
16	**130**	19.0	47.6	25.2	14.0	39.7	16.7	16	257	-30	80	297	22380.0381
16	**140**	19.0	47.6	25.2	14.0	39.7	16.7	16	257	-30	80	313	22380.0382
16	**150**	19.0	47.6	25.2	14.0	39.7	16.7	16	257	-30	80	328	22380.0383
20	**50**	25.0	57.1	33.8	20.5	50.7	21.5	20	403	-30	80	329	22380.0391
20	**60**	25.0	57.1	33.8	20.5	50.7	21.5	20	403	-30	80	343	22380.0392
20	**70**	25.0	57.1	33.8	20.5	50.7	21.5	20	403	-30	80	377	22380.0393
20	**80**	25.0	57.1	33.8	20.5	50.7	21.5	20	403	-30	80	392	22380.0396
20	**90**	25.0	57.1	33.8	20.5	50.7	21.5	20	403	-30	80	426	22380.0397
20	**100**	25.0	57.1	33.8	20.5	50.7	21.5	20	403	-30	80	440	22380.0400
20	**110**	25.0	57.1	33.8	20.5	50.7	21.5	20	403	-30	80	474	22380.0401
20	**120**	25.0	57.1	33.8	20.5	50.7	21.5	20	403	-30	80	488	22380.0404
20	**130**	25.0	57.1	33.8	20.5	50.7	21.5	20	403	-30	80	523	22380.0405
20	**140**	25.0	57.1	33.8	20.5	50.7	21.5	20	403	-30	80	546	22380.0406
20	**150**	25.0	57.1	33.8	20.5	50.7	21.5	20	403	-30	80	571	22380.0407
25	**50**	30.8	57.1	33.8	22.0	50.7	21.5	25	631	-30	80	425	22380.0409
25	**60**	30.8	57.1	33.8	22.0	50.7	21.5	25	631	-30	80	457	22380.0410
25	**70**	30.8	57.1	33.8	22.0	50.7	21.5	25	631	-30	80	490	22380.0411
25	**80**	30.8	57.1	33.8	22.0	50.7	21.5	25	631	-30	80	540	22380.0412
25	**90**	30.8	57.1	33.8	22.0	50.7	21.5	25	631	-30	80	573	22380.0413
25	**100**	30.8	57.1	33.8	22.0	50.7	21.5	25	631	-30	80	603	22380.0414
25	**110**	30.8	57.1	33.8	22.0	50.7	21.5	25	631	-30	80	640	22380.0415
25	**120**	30.8	57.1	33.8	22.0	50.7	21.5	25	631	-30	80	678	22380.0416
25	**130**	30.8	57.1	33.8	22.0	50.7	21.5	25	631	-30	80	715	22380.0417
25	**140**	30.8	57.1	33.8	22.0	50.7	21.5	25	631	-30	80	753	22380.0418
25	**150**	30.8	57.1	33.8	22.0	50.7	21.5	25	631	-30	80	790	22380.0419
Handle colour: blue													
5	**10**	5.5	33.2	14.5	6.0	26.7	10.8	5	24	-30	80	15	22380.0432
5	**15**	5.5	33.2	14.5	6.0	26.7	10.8	5	24	-30	80	15	22380.0433
5	**20**	5.5	33.2	14.5	6.0	26.7	10.8	5	24	-30	80	16	22380.0434
5	**25**	5.5	33.2	14.5	6.0	26.7	10.8	5	24	-30	80	17	22380.0435
5	**30**	5.5	33.2	14.5	6.0	26.7	10.8	5	24	-30	80	18	22380.0436
5	**35**	5.5	33.2	14.5	6.0	26.7	10.8	5	24	-30	80	19	22380.0425
5	**40**	5.5	33.2	14.5	6.0	26.7	10.8	5	24	-30	80	20	22380.0426
5	**45**	5.5	33.2	14.5	6.0	26.7	10.8	5	24	-30	80	21	22380.0427
5	**50**	5.5	33.2	14.5	6.0	26.7	10.8	5	24	-30	80	23	22380.0428
5	**60**	5.5	33.2	14.5	6.0	26.7	10.8	5	24	-30	80	24	22380.0429
5	**70**	5.5	33.2	14.5	6.0	26.7	10.8	5	24	-30	80	18	22380.0430
5	**80**	5.5	33.2	14.5	6.0	26.7	10.8	5	24	-30	80	19	22380.0431
6	**10**	7.0	33.2	14.5	7.0	26.7	10.8	6	35	-30	80	16	22380.0442
6	**15**	7.0	33.2	14.5	7.0	26.7	10.8	6	35	-30	80	17	22380.0443
6	**20**	7.0	33.2	14.5	7.0	26.7	10.8	6	35	-30	80	18	22380.0444
6	**25**	7.0	33.2	14.5	7.0	26.7	10.8	6	35	-30	80	19	22380.0445
6	**30**	7.0	33.2	14.5	7.0	26.7	10.8	6	35	-30	80	20	22380.0446
6	**35**	7.0	33.2	14.5	7.0	26.7	10.8	6	35	-30	80	21	22380.0447
6	**40**	7.0	33.2	14.5	7.0	26.7	10.8	6	35	-30	80	22	22380.0448
6	**45**	7.0	33.2	14.5	7.0	26.7	10.8	6	35	-30	80	23	22380.0449

[1] Shearing resistance similar to DIN 50141

chanhvinh.com

Dimensions								Location hole H11	Shearing resistance, two-shear[1] min.	min.	max.		Art. No.
d_1 -0.04 -0.08	l_1 +0.6	d_2	d_3	d_4	l_2 ±1	l_3	l_4						
[mm]								[mm]	[kN]	[°C]		[g]	
6	50	7.0	33.2	14.5	7.0	26.7	10.8	6	35	-30	80	24	22380.0450
6	60	7.0	33.2	14.5	7.0	26.7	10.8	6	35	-30	80	26	22380.0437
6	70	7.0	33.2	14.5	7.0	26.7	10.8	6	35	-30	80	28	22380.0438
6	80	7.0	33.2	14.5	7.0	26.7	10.8	6	35	-30	80	30	22380.0439
8	10	9.5	39.2	18.4	8.2	33.3	13.4	8	63	-30	80	38	22380.0452
8	15	9.5	39.2	18.4	8.2	33.3	13.4	8	63	-30	80	58	22380.0453
8	20	9.5	39.2	18.4	8.2	33.3	13.4	8	63	-30	80	40	22380.0454
8	25	9.5	39.2	18.4	8.2	33.3	13.4	8	63	-30	80	42	22380.0455
8	30	9.5	39.2	18.4	8.2	33.3	13.4	8	63	-30	80	44	22380.0456
8	35	9.5	39.2	18.4	8.2	33.3	13.4	8	63	-30	80	46	22380.0457
8	40	9.5	39.2	18.4	8.2	33.3	13.4	8	63	-30	80	47	22380.0458
8	45	9.5	39.2	18.4	8.2	33.3	13.4	8	63	-30	80	49	22380.0459
8	50	9.5	39.2	18.4	8.2	33.3	13.4	8	63	-30	80	51	22380.0460
8	60	9.5	39.2	18.4	8.2	33.3	13.4	8	63	-30	80	62	22380.0461
8	70	9.5	39.2	18.4	8.2	33.3	13.4	8	63	-30	80	65	22380.0462
8	80	9.5	39.2	18.4	8.2	33.3	13.4	8	63	-30	80	69	22380.0463
8	90	9.5	39.2	18.4	8.2	33.3	13.4	8	63	-30	80	36	22380.0451
8	100	9.5	39.2	18.4	8.2	33.3	13.4	8	63	-30	80	54	22380.0441
10	15	12.0	39.2	18.4	9.6	33.3	13.4	10	100	-30	80	86	22380.0471
10	20	12.0	39.2	18.4	9.6	33.3	13.4	10	100	-30	80	47	22380.0464
10	25	12.0	39.2	18.4	9.6	33.3	13.4	10	100	-30	80	49	22380.0465
10	30	12.0	39.2	18.4	9.6	33.3	13.4	10	100	-30	80	53	22380.0466
10	35	12.0	39.2	18.4	9.6	33.3	13.4	10	100	-30	80	55	22380.0467
10	40	12.0	39.2	18.4	9.6	33.3	13.4	10	100	-30	80	58	22380.0468
10	45	12.0	39.2	18.4	9.6	33.3	13.4	10	100	-30	80	61	22380.0469
10	50	12.0	39.2	18.4	9.6	33.3	13.4	10	100	-30	80	64	22380.0470
10	60	12.0	39.2	18.4	9.6	33.3	13.4	10	100	-30	80	70	22380.0472
10	70	12.0	39.2	18.4	9.6	33.3	13.4	10	100	-30	80	91	22380.0473
10	80	12.0	39.2	18.4	9.6	33.3	13.4	10	100	-30	80	97	22380.0474
10	90	12.0	39.2	18.4	9.6	33.3	13.4	10	100	-30	80	103	22380.0475
10	100	12.0	39.2	18.4	9.6	33.3	13.4	10	100	-30	80	109	22380.0476
10	110	12.0	39.2	18.4	9.6	33.3	13.4	10	100	-30	80	115	22380.0477
10	120	12.0	39.2	18.4	9.6	33.3	13.4	10	100	-30	80	53	22380.0478
12	20	14.5	47.6	25.2	10.6	39.7	16.7	12	144	-30	80	156	22380.0484
12	25	14.5	47.6	25.2	10.6	39.7	16.7	12	144	-30	80	96	22380.0485
12	30	14.5	47.6	25.2	10.6	39.7	16.7	12	144	-30	80	100	22380.0486
12	35	14.5	47.6	25.2	10.6	39.7	16.7	12	144	-30	80	105	22380.0487
12	40	14.5	47.6	25.2	10.6	39.7	16.7	12	144	-30	80	109	22380.0488
12	45	14.5	47.6	25.2	10.6	39.7	16.7	12	144	-30	80	113	22380.0489
12	50	14.5	47.6	25.2	10.6	39.7	16.7	12	144	-30	80	117	22380.0490
12	60	14.5	47.6	25.2	10.6	39.7	16.7	12	144	-30	80	126	22380.0492
12	70	14.5	47.6	25.2	10.6	39.7	16.7	12	144	-30	80	134	22380.0494
12	80	14.5	47.6	25.2	10.6	39.7	16.7	12	144	-30	80	143	22380.0496
12	90	14.5	47.6	25.2	10.6	39.7	16.7	12	144	-30	80	165	22380.0497
12	100	14.5	47.6	25.2	10.6	39.7	16.7	12	144	-30	80	173	22380.0498
12	110	14.5	47.6	25.2	10.6	39.7	16.7	12	144	-30	80	182	22380.0499
12	120	14.5	47.6	25.2	10.6	39.7	16.7	12	144	-30	80	177	22380.0500
16	30	19.0	47.6	25.2	14.0	39.7	16.7	16	257	-30	80	132	22380.0506
16	35	19.0	47.6	25.2	14.0	39.7	16.7	16	257	-30	80	140	22380.0507
16	40	19.0	47.6	25.2	14.0	39.7	16.7	16	257	-30	80	148	22380.0508
16	45	19.0	47.6	25.2	14.0	39.7	16.7	16	257	-30	80	155	22380.0509
16	50	19.0	47.6	25.2	14.0	39.7	16.7	16	257	-30	80	168	22380.0510
16	60	19.0	47.6	25.2	14.0	39.7	16.7	16	257	-30	80	178	22380.0512
16	70	19.0	47.6	25.2	14.0	39.7	16.7	16	257	-30	80	194	22380.0514
16	90	19.0	47.6	25.2	14.0	39.7	16.7	16	257	-30	80	234	22380.0517
16	80	19.0	47.6	25.2	14.0	39.7	16.7	16	257	-30	80	208	22380.0516
16	100	19.0	47.6	25.2	14.0	39.7	16.7	16	257	-30	80	251	22380.0518
16	110	19.0	47.6	25.2	14.0	39.7	16.7	16	257	-30	80	266	22380.0519
16	120	19.0	47.6	25.2	14.0	39.7	16.7	16	257	-30	80	281	22380.0520

[1] Shearing resistance similar to DIN 50141

chanhvinh.com

Dimensions								Location hole H11	Shearing resistance, two-shear[1] min.	min.	max.		Art. No.
d_1 -0.04 -0.08	l_1 +0.6	d_2	d_3	d_4	l_2 ±1	l_3	l_4						
[mm]								[mm]	[kN]	[°C]		[g]	
16	**130**	19.0	47.6	25.2	14.0	39.7	16.7	16	257	-30	80	297	22380.0521
16	**140**	19.0	47.6	25.2	14.0	39.7	16.7	16	257	-30	80	313	22380.0522
16	**150**	19.0	47.6	25.2	14.0	39.7	16.7	16	257	-30	80	328	22380.0523
20	**50**	25.0	57.1	33.8	20.5	50.7	21.5	20	403	-30	80	329	22380.0531
20	**60**	25.0	57.1	33.8	20.5	50.7	21.5	20	403	-30	80	343	22380.0532
20	**70**	25.0	57.1	33.8	20.5	50.7	21.5	20	403	-30	80	377	22380.0533
20	**80**	25.0	57.1	33.8	20.5	50.7	21.5	20	403	-30	80	392	22380.0536
20	**90**	25.0	57.1	33.8	20.5	50.7	21.5	20	403	-30	80	426	22380.0537
20	**100**	25.0	57.1	33.8	20.5	50.7	21.5	20	403	-30	80	440	22380.0540
20	**110**	25.0	57.1	33.8	20.5	50.7	21.5	20	403	-30	80	474	22380.0541
20	**120**	25.0	57.1	33.8	20.5	50.7	21.5	20	403	-30	80	488	22380.0544
20	**130**	25.0	57.1	33.8	20.5	50.7	21.5	20	403	-30	80	523	22380.0545
20	**140**	25.0	57.1	33.8	20.5	50.7	21.5	20	403	-30	80	546	22380.0546
20	**150**	25.0	57.1	33.8	20.5	50.7	21.5	20	403	-30	80	571	22380.0547
25	**50**	30.8	57.1	33.8	22.0	50.7	21.5	25	631	-30	80	425	22380.0549
25	**60**	30.8	57.1	33.8	22.0	50.7	21.5	25	631	-30	80	457	22380.0550
25	**70**	30.8	57.1	33.8	22.0	50.7	21.5	25	631	-30	80	490	22380.0551
25	**80**	30.8	57.1	33.8	22.0	50.7	21.5	25	631	-30	80	540	22380.0552
25	**90**	30.8	57.1	33.8	22.0	50.7	21.5	25	631	-30	80	573	22380.0553
25	**100**	30.8	57.1	33.8	22.0	50.7	21.5	25	631	-30	80	603	22380.0554
25	**110**	30.8	57.1	33.8	22.0	50.7	21.5	25	631	-30	80	640	22380.0555
25	**120**	30.8	57.1	33.8	22.0	50.7	21.5	25	631	-30	80	690	22380.0556
25	**130**	30.8	57.1	33.8	22.0	50.7	21.5	25	631	-30	80	715	22380.0557
25	**140**	30.8	57.1	33.8	22.0	50.7	21.5	25	631	-30	80	753	22380.0558
25	**150**	30.8	57.1	33.8	22.0	50.7	21.5	25	631	-30	80	790	22380.0559
Handle colour: black													
5	**10**	5.5	33.2	14.5	6.0	26.7	10.8	5	24	-30	80	15	22380.0812
5	**15**	5.5	33.2	14.5	6.0	26.7	10.8	5	24	-30	80	15	22380.0813
5	**20**	5.5	33.2	14.5	6.0	26.7	10.8	5	24	-30	80	16	22380.0814
5	**25**	5.5	33.2	14.5	6.0	26.7	10.8	5	24	-30	80	17	22380.0815
5	**30**	5.5	33.2	14.5	6.0	26.7	10.8	5	24	-30	80	18	22380.0816
5	**35**	5.5	33.2	14.5	6.0	26.7	10.8	5	24	-30	80	19	22380.0805
5	**40**	5.5	33.2	14.5	6.0	26.7	10.8	5	24	-30	80	20	22380.0806
5	**45**	5.5	33.2	14.5	6.0	26.7	10.8	5	24	-30	80	21	22380.0807
5	**50**	5.5	33.2	14.5	6.0	26.7	10.8	5	24	-30	80	23	22380.0808
5	**60**	5.5	33.2	14.5	6.0	26.7	10.8	5	24	-30	80	24	22380.0809
5	**70**	5.5	33.2	14.5	6.0	26.7	10.8	5	24	-30	80	18	22380.0810
5	**80**	5.5	33.2	14.5	6.0	26.7	10.8	5	24	-30	80	19	22380.0811
6	**10**	7.0	33.2	14.5	7.0	26.7	10.8	6	35	-30	80	16	22380.0822
6	**15**	7.0	33.2	14.5	7.0	26.7	10.8	6	35	-30	80	17	22380.0823
6	**20**	7.0	33.2	14.5	7.0	26.7	10.8	6	35	-30	80	18	22380.0824
6	**25**	7.0	33.2	14.5	7.0	26.7	10.8	6	35	-30	80	19	22380.0825
6	**30**	7.0	33.2	14.5	7.0	26.7	10.8	6	35	-30	80	20	22380.0826
6	**35**	7.0	33.2	14.5	7.0	26.7	10.8	6	35	-30	80	21	22380.0827
6	**40**	7.0	33.2	14.5	7.0	26.7	10.8	6	35	-30	80	22	22380.0828
6	**45**	7.0	33.2	14.5	7.0	26.7	10.8	6	35	-30	80	23	22380.0829
6	**50**	7.0	33.2	14.5	7.0	26.7	10.8	6	35	-30	80	24	22380.0830
6	**60**	7.0	33.2	14.5	7.0	26.7	10.8	6	35	-30	80	26	22380.0817
6	**70**	7.0	33.2	14.5	7.0	26.7	10.8	6	35	-30	80	28	22380.0818
6	**80**	7.0	33.2	14.5	7.0	26.7	10.8	6	35	-30	80	30	22380.0819
8	**10**	9.5	39.2	18.4	8.2	33.3	13.4	8	63	-30	80	38	22380.0832
8	**15**	9.5	39.2	18.4	8.2	33.3	13.4	8	63	-30	80	58	22380.0833
8	**20**	9.5	39.2	18.4	8.2	33.3	13.4	8	63	-30	80	40	22380.0834
8	**25**	9.5	39.2	18.4	8.2	33.3	13.4	8	63	-30	80	42	22380.0835
8	**30**	9.5	39.2	18.4	8.2	33.3	13.4	8	63	-30	80	42	22380.0836
8	**35**	9.5	39.2	18.4	8.2	33.3	13.4	8	63	-30	80	46	22380.0837
8	**40**	9.5	39.2	18.4	8.2	33.3	13.4	8	63	-30	80	47	22380.0838
8	**45**	9.5	39.2	18.4	8.2	33.3	13.4	8	63	-30	80	49	22380.0839

[1] Shearing resistance similar to DIN 50141

chanhvinh.com

Dimensions								Location hole H11	Shearing resistance, two-shear[1] min.	min.	max.		Art. No.
d_1 -0.04 -0.08	l_1 +0.6	d_2	d_3	d_4	l_2 ±1	l_3	l_4						
[mm]								[mm]	[kN]	[°C]		[g]	
8	50	9.5	39.2	18.4	8.2	33.3	13.4	8	63	-30	80	51	22380.0840
8	60	9.5	39.2	18.4	8.2	33.3	13.4	8	63	-30	80	62	22380.0841
8	70	9.5	39.2	18.4	8.2	33.3	13.4	8	63	-30	80	65	22380.0842
8	80	9.5	39.2	18.4	8.2	33.3	13.4	8	63	-30	80	69	22380.0843
8	90	9.5	39.2	18.4	8.2	33.3	13.4	8	63	-30	80	36	22380.0831
8	100	9.5	39.2	18.4	8.2	33.3	13.4	8	63	-30	80	54	22380.0821
10	15	12.0	39.2	18.4	9.6	33.3	13.4	10	100	-30	80	86	22380.0851
10	20	12.0	39.2	18.4	9.6	33.3	13.4	10	100	-30	80	47	22380.0844
10	25	12.0	39.2	18.4	9.6	33.3	13.4	10	100	-30	80	49	22380.0845
10	30	12.0	39.2	18.4	9.6	33.3	13.4	10	100	-30	80	53	22380.0846
10	35	12.0	39.2	18.4	9.6	33.3	13.4	10	100	-30	80	55	22380.0847
10	40	12.0	39.2	18.4	9.6	33.3	13.4	10	100	-30	80	58	22380.0848
10	45	12.0	39.2	18.4	9.6	33.3	13.4	10	100	-30	80	61	22380.0849
10	50	12.0	39.2	18.4	9.6	33.3	13.4	10	100	-30	80	64	22380.0850
10	60	12.0	39.2	18.4	9.6	33.3	13.4	10	100	-30	80	70	22380.0852
10	70	12.0	39.2	18.4	9.6	33.3	13.4	10	100	-30	80	91	22380.0853
10	80	12.0	39.2	18.4	9.6	33.3	13.4	10	100	-30	80	97	22380.0854
10	90	12.0	39.2	18.4	9.6	33.3	13.4	10	100	-30	80	103	22380.0855
10	100	12.0	39.2	18.4	9.6	33.3	13.4	10	100	-30	80	109	22380.0856
10	110	12.0	39.2	18.4	9.6	33.3	13.4	10	100	-30	80	115	22380.0857
10	120	12.0	39.2	18.4	9.6	33.3	13.4	10	100	-30	80	53	22380.0858
12	20	14.5	47.6	25.2	10.6	39.7	16.7	12	144	-30	80	156	22380.0864
12	25	14.5	47.6	25.2	10.6	39.7	16.7	12	144	-30	80	96	22380.0865
12	30	14.5	47.6	25.2	10.6	39.7	16.7	12	144	-30	80	100	22380.0866
12	35	14.5	47.6	25.2	10.6	39.7	16.7	12	144	-30	80	105	22380.0867
12	40	14.5	47.6	25.2	10.6	39.7	16.7	12	144	-30	80	109	22380.0868
12	45	14.5	47.6	25.2	10.6	39.7	16.7	12	144	-30	80	113	22380.0869
12	50	14.5	47.6	25.2	10.6	39.7	16.7	12	144	-30	80	117	22380.0870
12	60	14.5	47.6	25.2	10.6	39.7	16.7	12	144	-30	80	126	22380.0872
12	70	14.5	47.6	25.2	10.6	39.7	16.7	12	144	-30	80	134	22380.0874
12	80	14.5	47.6	25.2	10.6	39.7	16.7	12	144	-30	80	143	22380.0876
12	90	14.5	47.6	25.2	10.6	39.7	16.7	12	144	-30	80	165	22380.0877
12	100	14.5	47.6	25.2	10.6	39.7	16.7	12	144	-30	80	173	22380.0878
12	110	14.5	47.6	25.2	10.6	39.7	16.7	12	144	-30	80	182	22380.0879
12	120	14.5	47.6	25.2	10.6	39.7	16.7	12	144	-30	80	177	22380.0880
16	30	19.0	47.6	25.2	14.0	39.7	16.7	16	257	-30	80	132	22380.0886
16	35	19.0	47.6	25.2	14.0	39.7	16.7	16	257	-30	80	140	22380.0887
16	40	19.0	47.6	25.2	14.0	39.7	16.7	16	257	-30	80	148	22380.0888
16	45	19.0	47.6	25.2	14.0	39.7	16.7	16	257	-30	80	155	22380.0889
16	50	19.0	47.6	25.2	14.0	39.7	16.7	16	257	-30	80	168	22380.0890
16	60	19.0	47.6	25.2	14.0	39.7	16.7	16	257	-30	80	178	22380.0892
16	70	19.0	47.6	25.2	14.0	39.7	16.7	16	257	-30	80	194	22380.0894
16	80	19.0	47.6	25.2	14.0	39.7	16.7	16	257	-30	80	208	22380.0896
16	90	19.0	47.6	25.2	14.0	39.7	16.7	16	257	-30	80	234	22380.0897
16	100	19.0	47.6	25.2	14.0	39.7	16.7	16	257	-30	80	251	22380.0898
16	110	19.0	47.6	25.2	14.0	39.7	16.7	16	257	-30	80	266	22380.0899
16	120	19.0	47.6	25.2	14.0	39.7	16.7	16	257	-30	80	281	22380.0900
16	130	19.0	47.6	25.2	14.0	39.7	16.7	16	257	-30	80	297	22380.0901
16	140	19.0	47.6	25.2	14.0	39.7	16.7	16	257	-30	80	313	22380.0902
16	150	19.0	47.6	25.2	14.0	39.7	16.7	16	257	-30	80	328	22380.0903
20	50	25.0	57.1	33.8	20.5	50.7	21.5	20	403	-30	80	329	22380.0905
20	60	25.0	57.1	33.8	20.5	50.7	21.5	20	403	-30	80	343	22380.0904
20	70	25.0	57.1	33.8	20.5	50.7	21.5	20	403	-30	80	377	22380.0906
20	80	25.0	57.1	33.8	20.5	50.7	21.5	20	403	-30	80	392	22380.0908
20	90	25.0	57.1	33.8	20.5	50.7	21.5	20	403	-30	80	426	22380.0909
20	100	25.0	57.1	33.8	20.5	50.7	21.5	20	403	-30	80	440	22380.0912
20	110	25.0	57.1	33.8	20.5	50.7	21.5	20	403	-30	80	474	22380.0913
20	120	25.0	57.1	33.8	20.5	50.7	21.5	20	403	-30	80	488	22380.0916
20	130	25.0	57.1	33.8	20.5	50.7	21.5	20	403	-30	80	523	22380.0917

[1] Shearing resistance similar to DIN 50141

chanhvinh.com

Dimensions								Location hole H11	Shearing resistance, two-shear[1] min.	min.	max.		Art. No.
d_1 -0.04 -0.08	l_1 +0.6	d_2	d_3	d_4	l_2 ±1	l_3	l_4						
[mm]								[mm]	[kN]	[°C]		[g]	
20	**140**	25.0	57.1	33.8	20.5	50.7	21.5	20	403	-30	80	546	22380.0918
20	**150**	25.0	57.1	33.8	20.5	50.7	21.5	20	403	-30	80	571	22380.0919
25	**50**	30.8	57.1	33.8	22.0	50.7	21.5	25	631	-30	80	425	22380.0921
25	**60**	30.8	57.1	33.8	22.0	50.7	21.5	25	631	-30	80	457	22380.0922
25	**70**	30.8	57.1	33.8	22.0	50.7	21.5	25	631	-30	80	490	22380.0923
25	**80**	30.8	57.1	33.8	22.0	50.7	21.5	25	631	-30	80	540	22380.0924
25	**90**	30.8	57.1	33.8	22.0	50.7	21.5	25	631	-30	80	573	22380.0925
25	**100**	30.8	57.1	33.8	22.0	50.7	21.5	25	631	-30	80	603	22380.0926
25	**110**	30.8	57.1	33.8	22.0	50.7	21.5	25	631	-30	80	640	22380.0927
25	**120**	30.8	57.1	33.8	22.0	50.7	21.5	25	631	-30	80	678	22380.0928
25	**130**	30.8	57.1	33.8	22.0	50.7	21.5	25	631	-30	80	715	22380.0929
25	**140**	30.8	57.1	33.8	22.0	50.7	21.5	25	631	-30	80	753	22380.0930
25	**150**	30.8	57.1	33.8	22.0	50.7	21.5	25	631	-30	80	790	22380.0931

[1] Shearing resistance similar to DIN 50141

Application example



chanhvinh.com

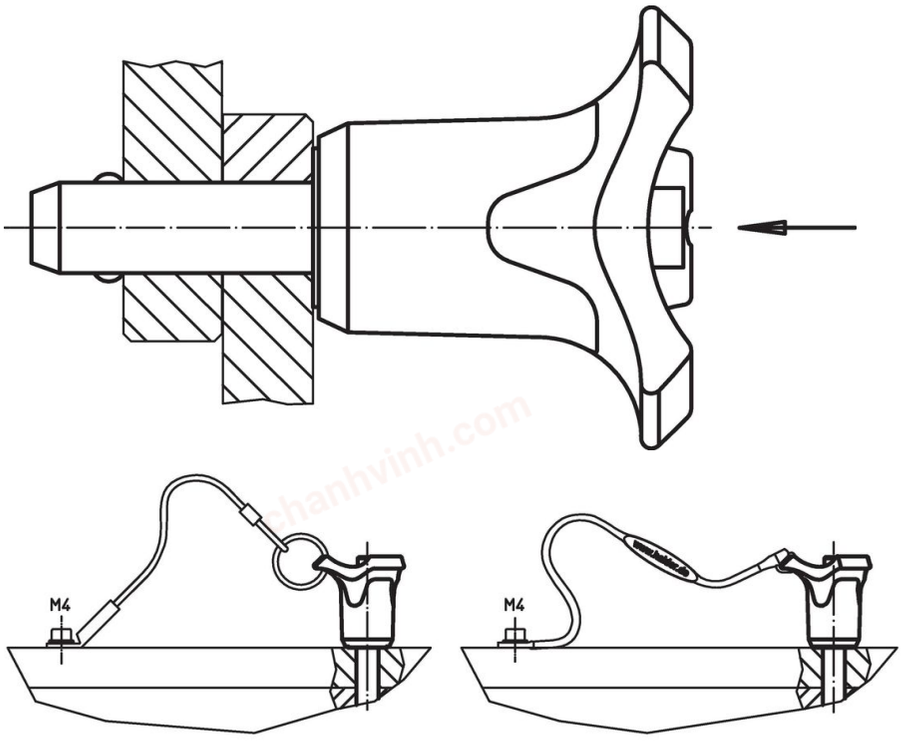

Compliance

RoHS-compliant
Compliant with Directive 2011/65/EU [RoHS].

Does not contain SVHC substances
No SVHC substances with more than 0.1% w/w contained - SVHC list [REACH] as of 04.02.2026.

SCIP-code
N/A

Contains Proposition 65 substances
Nickel can cause cancer from exposure.
https://www.P65Warnings.ca.gov/

Free from Conflict Minerals
This product does not contain any substances designated as "conflict minerals" such as tantalum, tin, gold or tungsten from the Democratic Republic of Congo or adjacent countries.

POP-compliant
Contains no persistent organic pollutants – Stockholm Convention [POP] as of September 2025.

PFAS-compliant
Contains no per- and polyfluoroalkyl substances (PFAS).

TSCA-compliant
Agent concentration in this product does not exceed the specified threshold.