chanhvinh.com

Ball Lock Pins • self-locking, with adjustable handle

EH 22370. /EH 22380.



Product Description

For fixing and clamping of two parts or play-free application to the counterpart. Clamping range infinitely adjustable by hand via nut/lock nut.
All versions are corrosion resistant. When using stainless steel 1.4542: high-strength, hardened, abrasion resistant pin with high load capacity.

Material

Pin part
- Stainless steel 1.4305
- Stainless steel 1.4542, precipitation-hardened

Lock nut
- Thermoplastic, black

Spring
- Stainless steel

Adjusting nut
- Thermoplastic, silver

Operation

The balls are unlocked by pressing the button.

Characteristic

Types from stainless steel 1.4542 with marking below the balls.

More information

Notes

Customized design on request.

Accessories

Can easily be fitted with retaining cable EH 22400.

Further products

- Locating Bushings, for ball lock pins and socket pins
- Locating Bushings, with flange, for ball lock pins and socket pins
- Retaining Cables
- Positioning Bushings, with collar, DIN 172 A
- Positioning Bushings, without collar, DIN 179 A

Drawing

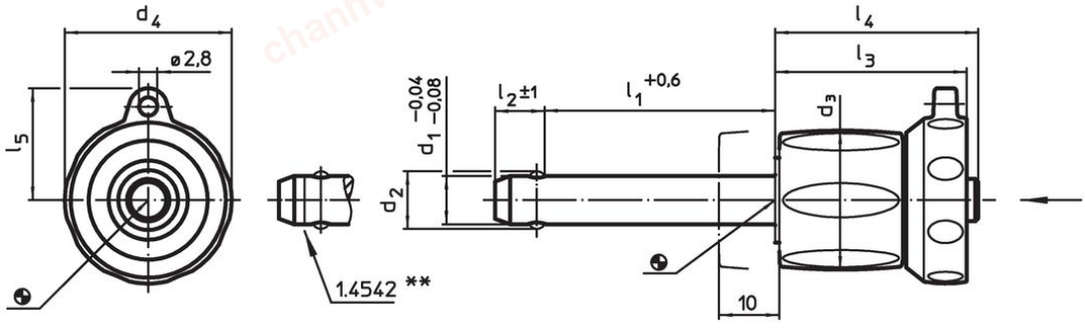

** Types from stainless steel 1.4542 with marking.

Order information

Dimensions									Location hole H11	min.	max.		Shearing resistance, two-shear[1] min.	Art. No.
d_1 -0.04 -0.08	l_1 +0.6	d_2	d_3	d_4	l_2 ±1	l_3	l_4	l_5						
[mm]									[mm]	[°C]		[g]	[kN]	
Stainless steel 1.4305														
5	**0 – 10**	5.5	17.6	23.6	6.0	25.7	26.2	15.9	5	-30	80	24	14	22370.0592
5	**5 – 15**	5.5	17.6	23.6	6.0	25.7	26.2	15.9	5	-30	80	25	14	22370.0593
5	**10 – 20**	5.5	17.6	23.6	6.0	25.7	26.2	15.9	5	-30	80	26	14	22370.0594
5	**15 – 25**	5.5	17.6	23.6	6.0	25.7	26.2	15.9	5	-30	80	26	14	22370.0595
5	**20 – 30**	5.5	17.6	23.6	6.0	25.7	26.2	15.9	5	-30	80	27	14	22370.0596
6	**0 – 10**	7.0	17.6	23.6	7.0	25.7	26.2	15.9	6	-30	80	26	21	22370.0602
6	**5 – 15**	7.0	17.6	23.6	7.0	25.7	26.2	15.9	6	-30	80	27	21	22370.0603

[1] Shearing resistance similar to DIN 50141

chanhvinh.com

Dimensions									Location hole H11				Shearing resistance, two-shear[1] min.	Art. No.
d_1 -0.04 -0.08	l_1 +0.6	d_2	d_3	d_4	l_2 ±1	l_3	l_4	l_5		min.	max.			
[mm]									[mm]	[°C]		[g]	[kN]	
6	**10 – 20**	7.0	17.6	23.6	7.0	25.7	26.2	15.9	6	-30	80	27	21	22370.0604
6	**15 – 25**	7.0	17.6	23.6	7.0	25.7	26.2	15.9	6	-30	80	28	21	22370.0605
6	**20 – 30**	7.0	17.6	23.6	7.0	25.7	26.2	15.9	6	-30	80	27	21	22370.0606
6	**25 – 35**	7.0	17.6	23.6	7.0	25.7	26.2	15.9	6	-30	80	30	21	22370.0607
6	**30 – 40**	7.0	17.6	23.6	7.0	25.7	26.2	15.9	6	-30	80	31	21	22370.0608
6	**35 – 45**	7.0	17.6	23.6	7.0	25.7	26.2	15.9	6	-30	80	32	21	22370.0609
6	**40 – 50**	7.0	17.6	23.6	7.0	25.7	26.2	15.9	6	-30	80	33	21	22370.0610
8	**10 – 20**	9.5	23.0	27.6	8.2	31.2	33.1	18.0	8	-30	80	58	38	22370.0614
8	**15 – 25**	9.5	23.0	27.6	8.2	31.2	33.1	18.0	8	-30	80	60	38	22370.0615
8	**20 – 30**	9.5	23.0	27.6	8.2	31.2	33.1	18.0	8	-30	80	60	38	22370.0616
8	**25 – 35**	9.5	23.0	27.6	8.2	31.2	33.1	18.0	8	-30	80	62	38	22370.0617
8	**30 – 40**	9.5	23.0	27.6	8.2	31.2	33.1	18.0	8	-30	80	64	38	22370.0618
8	**35 – 45**	9.5	23.0	27.6	8.2	31.2	33.1	18.0	8	-30	80	65	38	22370.0619
8	**40 – 50**	9.5	23.0	27.6	8.2	31.2	33.1	18.0	8	-30	80	65	38	22370.0620
10	**10 – 20**	12.0	23.0	27.6	9.6	31.2	33.1	18.0	10	-30	80	65	60	22370.0624
10	**15 – 25**	12.0	23.0	27.6	9.6	31.2	33.1	18.0	10	-30	80	66	60	22370.0625
10	**20 – 30**	12.0	23.0	27.6	9.6	31.2	33.1	18.0	10	-30	80	69	60	22370.0626
10	**25 – 35**	12.0	23.0	27.6	9.6	31.2	33.1	18.0	10	-30	80	72	60	22370.0627
10	**30 – 40**	12.0	23.0	27.6	9.6	31.2	33.1	18.0	10	-30	80	75	60	22370.0628
10	**35 – 45**	12.0	23.0	27.6	9.6	31.2	33.1	18.0	10	-30	80	78	60	22370.0629
10	**40 – 50**	12.0	23.0	27.6	9.6	31.2	33.1	18.0	10	-30	80	80	60	22370.0630
10	**50 – 60**	12.0	23.0	27.6	9.6	31.2	33.1	18.0	10	-30	80	86	60	22370.0632
12	**15 – 25**	14.5	29.0	34.6	10.6	36.7	39.5	21.8	12	-30	80	121	87	22370.0635
12	**20 – 30**	14.5	29.0	34.6	10.6	36.7	39.5	21.8	12	-30	80	130	87	22370.0636
12	**25 – 35**	14.5	29.0	34.6	10.6	36.7	39.5	21.8	12	-30	80	130	87	22370.0637
12	**30 – 40**	14.5	29.0	34.6	10.6	36.7	39.5	21.8	12	-30	80	134	87	22370.0638
12	**35 – 45**	14.5	29.0	34.6	10.6	36.7	39.5	21.8	12	-30	80	138	87	22370.0639
12	**40 – 50**	14.5	29.0	34.6	10.6	36.7	39.5	21.8	12	-30	80	142	87	22370.0640
12	**50 – 60**	14.5	29.0	34.6	10.6	36.7	39.5	21.8	12	-30	80	150	87	22370.0642
12	**60 – 70**	14.5	29.0	34.6	10.6	36.7	39.5	21.8	12	-30	80	159	87	22370.0644
12	**70 – 80**	14.5	29.0	34.6	10.6	36.7	39.5	21.8	12	-30	80	167	87	22370.0646
16	**20 – 30**	19.0	29.0	34.6	14.0	36.7	39.5	21.8	16	-30	80	159	155	22370.0656
16	**25 – 35**	19.0	29.0	34.6	14.0	36.7	39.5	21.8	16	-30	80	165	155	22370.0657
16	**30 – 40**	19.0	29.0	34.6	14.0	36.7	39.5	21.8	16	-30	80	173	155	22370.0658
16	**35 – 45**	19.0	29.0	34.6	14.0	36.7	39.5	21.8	16	-30	80	180	155	22370.0659
16	**40 – 50**	19.0	29.0	34.6	14.0	36.7	39.5	21.8	16	-30	80	188	155	22370.0660
16	**50 – 60**	19.0	29.0	34.6	14.0	36.7	39.5	21.8	16	-30	80	203	155	22370.0662
16	**60 – 70**	19.0	29.0	34.6	14.0	36.7	39.5	21.8	16	-30	80	218	155	22370.0664
16	**70 – 80**	19.0	29.0	34.6	14.0	36.7	39.5	21.8	16	-30	80	234	155	22370.0666
Stainless steel 1.4542, precipitation-hardened														
5	**0 – 10**	5.5	17.6	23.6	6.0	25.7	26.2	15.9	5	-30	80	23	24	22380.0592
5	**5 – 15**	5.5	17.6	23.6	6.0	25.7	26.2	15.9	5	-30	80	24	24	22380.0593
5	**10 – 20**	5.5	17.6	23.6	6.0	25.7	26.2	15.9	5	-30	80	25	24	22380.0594
5	**15 – 25**	5.5	17.6	23.6	6.0	25.7	26.2	15.9	5	-30	80	26	24	22380.0595
5	**20 – 30**	5.5	17.6	23.6	6.0	25.7	26.2	15.9	5	-30	80	28	24	22380.0596
6	**0 – 10**	7.0	17.6	23.6	7.0	25.7	26.2	15.9	6	-30	80	25	35	22380.0602
6	**5 – 15**	7.0	17.6	23.6	7.0	25.7	26.2	15.9	6	-30	80	26	35	22380.0603
6	**10 – 20**	7.0	17.6	23.6	7.0	25.7	26.2	15.9	6	-30	80	27	35	22380.0604
6	**15 – 25**	7.0	17.6	23.6	7.0	25.7	26.2	15.9	6	-30	80	28	35	22380.0605
6	**20 – 30**	7.0	17.6	23.6	7.0	25.7	26.2	15.9	6	-30	80	30	35	22380.0606
6	**25 – 35**	7.0	17.6	23.6	7.0	25.7	26.2	15.9	6	-30	80	30	35	22380.0607
6	**30 – 40**	7.0	17.6	23.6	7.0	25.7	26.2	15.9	6	-30	80	30	35	22380.0608
6	**35 – 45**	7.0	17.6	23.6	7.0	25.7	26.2	15.9	6	-30	80	32	35	22380.0609
6	**40 – 50**	7.0	17.6	23.6	7.0	25.7	26.2	15.9	6	-30	80	33	35	22380.0610
8	**10 – 20**	9.5	23.0	27.6	8.2	31.2	33.1	18.0	8	-30	80	56	63	22380.0614
8	**15 – 25**	9.5	23.0	27.6	8.2	31.2	33.1	18.0	8	-30	80	58	63	22380.0615
8	**20 – 30**	9.5	23.0	27.6	8.2	31.2	33.1	18.0	8	-30	80	60	63	22380.0616
8	**25 – 35**	9.5	23.0	27.6	8.2	31.2	33.1	18.0	8	-30	80	62	63	22380.0617

[1] Shearing resistance similar to DIN 50141

chanhvinh.com

Dimensions									Location hole H11	min.	max.		Shearing resistance, two-shear[1] min.	Art. No.
d_1 -0.04 -0.08	l_1 +0.6	d_2	d_3	d_4	l_2 ±1	l_3	l_4	l_5						
[mm]									[mm]	[°C]		[g]	[kN]	
8	**30 – 40**	9.5	23.0	27.6	8.2	31.2	33.1	18.0	8	-30	80	63	63	22380.0618
8	**35 – 45**	9.5	23.0	27.6	8.2	31.2	33.1	18.0	8	-30	80	66	63	22380.0619
8	**40 – 50**	9.5	23.0	27.6	8.2	31.2	33.1	18.0	8	-30	80	67	63	22380.0620
10	**10 – 20**	12.0	23.0	27.6	9.6	31.2	33.1	18.0	10	-30	80	60	100	22380.0624
10	**15 – 25**	12.0	23.0	27.6	9.6	31.2	33.1	18.0	10	-30	80	65	100	22380.0625
10	**20 – 30**	12.0	23.0	27.6	9.6	31.2	33.1	18.0	10	-30	80	68	100	22380.0626
10	**25 – 35**	12.0	23.0	27.6	9.6	31.2	33.1	18.0	10	-30	80	71	100	22380.0627
10	**30 – 40**	12.0	23.0	27.6	9.6	31.2	33.1	18.0	10	-30	80	75	100	22380.0628
10	**35 – 45**	12.0	23.0	27.6	9.6	31.2	33.1	18.0	10	-30	80	75	100	22380.0629
10	**40 – 50**	12.0	23.0	27.6	9.6	31.2	33.1	18.0	10	-30	80	80	100	22380.0630
10	**50 – 60**	12.0	23.0	27.6	9.6	31.2	33.1	18.0	10	-30	80	90	100	22380.0632
12	**15 – 25**	14.5	29.0	34.6	10.6	36.7	39.5	21.8	12	-30	80	120	144	22380.0635
12	**20 – 30**	14.5	29.0	34.6	10.6	36.7	39.5	21.8	12	-30	80	125	144	22380.0636
12	**25 – 35**	14.5	29.0	34.6	10.6	36.7	39.5	21.8	12	-30	80	140	144	22380.0637
12	**30 – 40**	14.5	29.0	34.6	10.6	36.7	39.5	21.8	12	-30	80	133	144	22380.0638
12	**35 – 45**	14.5	29.0	34.6	10.6	36.7	39.5	21.8	12	-30	80	137	144	22380.0639
12	**40 – 50**	14.5	29.0	34.6	10.6	36.7	39.5	21.8	12	-30	80	141	144	22380.0640
12	**50 – 60**	14.5	29.0	34.6	10.6	36.7	39.5	21.8	12	-30	80	150	144	22380.0642
12	**60 – 70**	14.5	29.0	34.6	10.6	36.7	39.5	21.8	12	-30	80	158	144	22380.0644
12	**70 – 80**	14.5	29.0	34.6	10.6	36.7	39.5	21.8	12	-30	80	170	144	22380.0646
16	**20 – 30**	19.0	29.0	34.6	14.0	36.7	39.5	21.8	16	-30	80	156	257	22380.0656
16	**25 – 35**	19.0	29.0	34.6	14.0	36.7	39.5	21.8	16	-30	80	164	257	22380.0657
16	**30 – 40**	19.0	29.0	34.6	14.0	36.7	39.5	21.8	16	-30	80	171	257	22380.0658
16	**35 – 45**	19.0	29.0	34.6	14.0	36.7	39.5	21.8	16	-30	80	182	257	22380.0659
16	**40 – 50**	19.0	29.0	34.6	14.0	36.7	39.5	21.8	16	-30	80	186	257	22380.0660
16	**50 – 60**	19.0	29.0	34.6	14.0	36.7	39.5	21.8	16	-30	80	201	257	22380.0662
16	**60 – 70**	19.0	29.0	34.6	14.0	36.7	39.5	21.8	16	-30	80	217	257	22380.0664
16	**70 – 80**	19.0	29.0	34.6	14.0	36.7	39.5	21.8	16	-30	80	232	257	22380.0666

[1] Shearing resistance similar to DIN 50141

chanhvinh.com

Application example

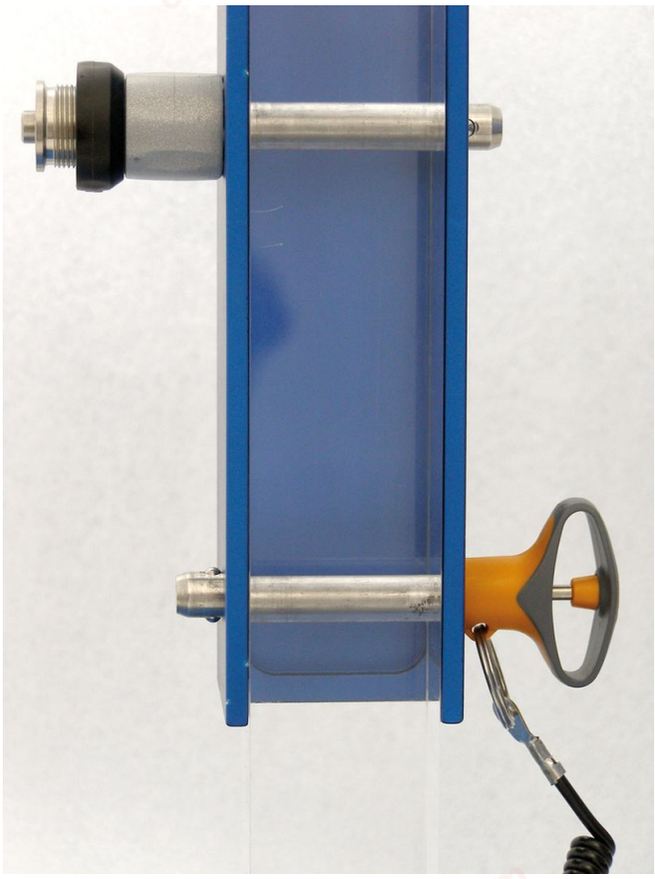

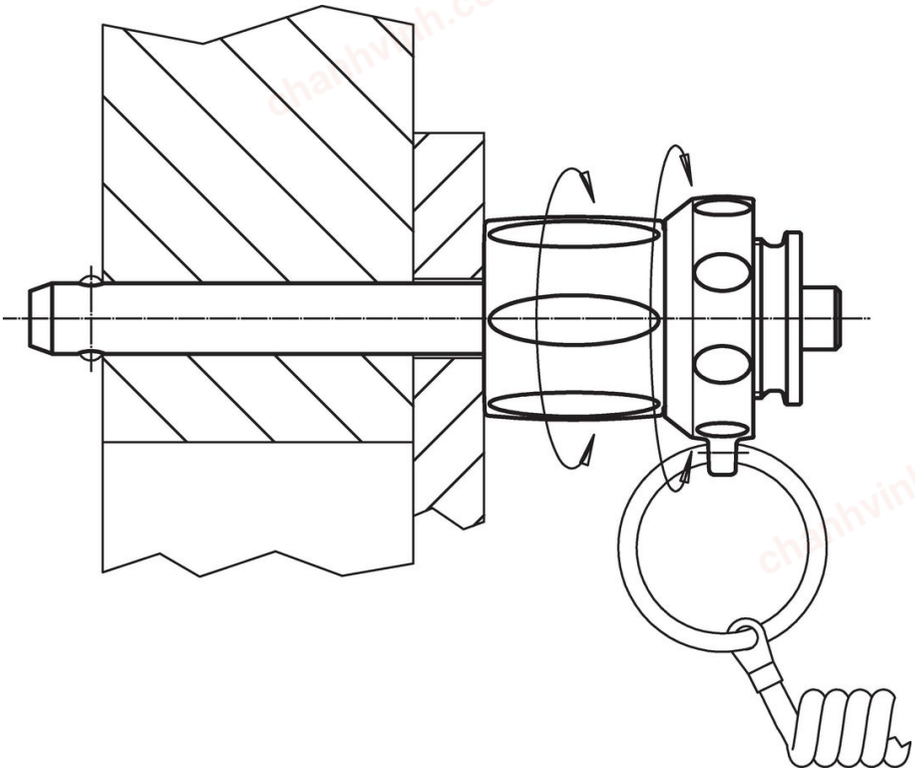

chanhvinh.com

Compliance

RoHS-compliant
Compliant with Directive 2011/65/EU [RoHS].

Does not contain SVHC substances
No SVHC substances with more than 0.1% w/w contained - SVHC list [REACH] as of 04.02.2026.

SCIP-code
N/A

Contains Proposition 65 substances


Nickel can cause cancer from exposure.
https://www.P65Warnings.ca.gov/

Free from Conflict Minerals
This product does not contain any substances designated as "conflict minerals" such as tantalum, tin, gold or tungsten from the Democratic Republic of Congo or adjacent countries.

POP-compliant
Contains no persistent organic pollutants – Stockholm Convention [POP] as of September 2025.

PFAS-compliant
Contains no per- and polyfluoroalkyl substances (PFAS).

TSCA-compliant
Agent concentration in this product does not exceed the specified threshold.