chanhvinh.com

Ball Lock Pins • self-locking, with elastic handle

EH 22370. /EH 22380.



Product Description

For quick fastening, locking, adjusting, changing and securing. For various applications in different sectors, e.g. sports, leisure, rehabilitation, medical healing, machine and plant construction etc. Quickly and easily unlockable for frequently repeated connections.
All versions are corrosion resistant. When using stainless steel 1.4542: high-strength, hardened, abrasion resistant pin with high load capacity.
Elastic and ergonomic handle with integrated reset (locking). New, modern, patented design.

Material

Pin part
- Stainless steel 1.4305
- Stainless steel 1.4542, precipitation-hardened

Handle
- Thermoplastic (PBT/TPE), grey / orange

Operation

The balls are unlocked by pressing the button.

Characteristic

Types from stainless steel 1.4542 with marking below the balls.

More information

Notes

Customized design on request.

Accessories

Can easily be fitted with retaining cable EH 22400.

Further products

- Locating Bushings, for ball lock pins and socket pins
- Locating Bushings, with flange, for ball lock pins and socket pins
- Retaining Cables
- Positioning Bushings, with collar, DIN 172 A
- Positioning Bushings, without collar, DIN 179 A

Drawing

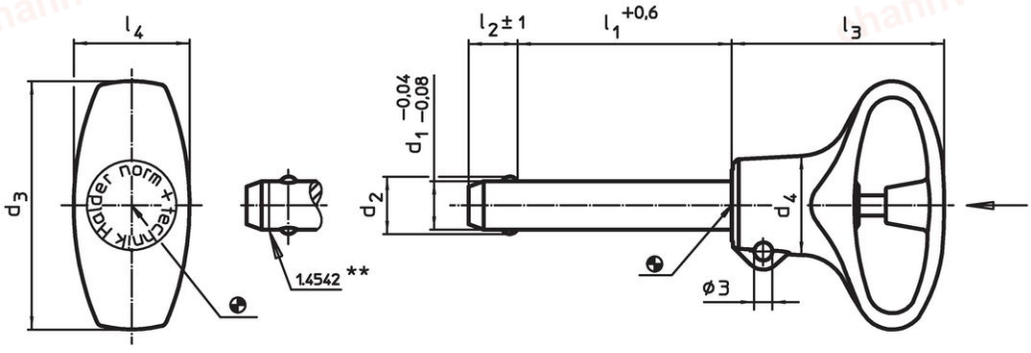

** Types from stainless steel 1.4542 with marking.

Order information

Dimensions								Location hole					Art. No.
d_1 -0.04 -0.08	l_1 +0.6	d_2	d_3	d_4	l_2 ±1	l_3	l_4	H11	min.	max.		Shearing resistance, two-shear[1] min.	
[mm]								[mm]	[°C]		[g]	[kN]	
Stainless steel 1.4305													
5	**10**	5.5	36	12.7	6.0	31.0	15.9	5	-30	80	9.2	14	22370.0712
5	**15**	5.5	36	12.7	6.0	31.0	15.9	5	-30	80	9.9	14	22370.0713
5	**20**	5.5	36	12.7	6.0	31.0	15.9	5	-30	80	11.0	14	22370.0714
5	**25**	5.5	36	12.7	6.0	31.0	15.9	5	-30	80	11.0	14	22370.0715
5	**30**	5.5	36	12.7	6.0	31.0	15.9	5	-30	80	12.0	14	22370.0716

[1] Shearing resistance similar to DIN 50141

chanhvinh.com

Dimensions								Location hole H11	min.	max.		Shearing resistance, two-shear[1] min.	Art. No.
d_1 -0.04 -0.08	l_1 +0.6	d_2	d_3	d_4	l_2 ±1	l_3	l_4						
[mm]								[mm]	[°C]		[g]	[kN]	
6	10	7.0	36	12.7	7.0	31.0	15.9	6	-30	80	10.0	21	22370.0722
6	15	7.0	36	12.7	7.0	31.0	15.9	6	-30	80	11.0	21	22370.0723
6	20	7.0	36	12.7	7.0	31.0	15.9	6	-30	80	13.0	21	22370.0724
6	25	7.0	36	12.7	7.0	31.0	15.9	6	-30	80	13.0	21	22370.0725
6	30	7.0	36	12.7	7.0	31.0	15.9	6	-30	80	14.0	21	22370.0726
6	35	7.0	36	12.7	7.0	31.0	15.9	6	-30	80	16.0	21	22370.0727
6	40	7.0	36	12.7	7.0	31.0	15.9	6	-30	80	16.0	21	22370.0728
6	45	7.0	36	12.7	7.0	31.0	15.9	6	-30	80	17.0	21	22370.0729
6	50	7.0	36	12.7	7.0	31.0	15.9	6	-30	80	18.0	21	22370.0730
8	20	9.5	41	16.4	8.2	34.8	19.2	8	-30	80	22.0	38	22370.0734
8	25	9.5	41	16.4	8.2	34.8	19.2	8	-30	80	25.0	38	22370.0735
8	30	9.5	41	16.4	8.2	34.8	19.2	8	-30	80	26.0	38	22370.0736
8	35	9.5	41	16.4	8.2	34.8	19.2	8	-30	80	28.0	38	22370.0737
8	40	9.5	41	16.4	8.2	34.8	19.2	8	-30	80	30.0	38	22370.0738
8	45	9.5	41	16.4	8.2	34.8	19.2	8	-30	80	32.0	38	22370.0739
8	50	9.5	41	16.4	8.2	34.8	19.2	8	-30	80	34.0	38	22370.0740
10	20	12.0	41	16.4	9.6	34.8	19.2	10	-30	80	30.0	60	22370.0744
10	25	12.0	41	16.4	9.6	34.8	19.2	10	-30	80	32.0	60	22370.0745
10	30	12.0	41	16.4	9.6	34.8	19.2	10	-30	80	36.0	60	22370.0746
10	35	12.0	41	16.4	9.6	34.8	19.2	10	-30	80	38.0	60	22370.0747
10	40	12.0	41	16.4	9.6	34.8	19.2	10	-30	80	41.0	60	22370.0748
10	45	12.0	41	16.4	9.6	34.8	19.2	10	-30	80	44.0	60	22370.0749
10	50	12.0	41	16.4	9.6	34.8	19.2	10	-30	80	47.0	60	22370.0750
10	60	12.0	41	16.4	9.6	34.8	19.2	10	-30	80	53.0	60	22370.0752
12	25	14.5	49	21.2	10.6	40.5	24.8	12	-30	80	54.0	87	22370.0765
12	30	14.5	49	21.2	10.6	40.5	24.8	12	-30	80	58.0	87	22370.0766
12	35	14.5	49	21.2	10.6	40.5	24.8	12	-30	80	62.0	87	22370.0767
12	40	14.5	49	21.2	10.6	40.5	24.8	12	-30	80	67.0	87	22370.0768
12	45	14.5	49	21.2	10.6	40.5	24.8	12	-30	80	71.0	87	22370.0769
12	50	14.5	49	21.2	10.6	40.5	24.8	12	-30	80	76.0	87	22370.0770
12	60	14.5	49	21.2	10.6	40.5	24.8	12	-30	80	83.0	87	22370.0772
12	70	14.5	49	21.2	10.6	40.5	24.8	12	-30	80	93.0	87	22370.0774
12	80	14.5	49	21.2	10.6	40.5	24.8	12	-30	80	101.0	87	22370.0776
16	30	19.0	49	21.2	14.0	40.5	24.8	16	-30	80	92.0	155	22370.0786
16	35	19.0	49	21.2	14.0	40.5	24.8	16	-30	80	101.0	155	22370.0787
16	40	19.0	49	21.2	14.0	40.5	24.8	16	-30	80	109.0	155	22370.0788
16	45	19.0	49	21.2	14.0	40.5	24.8	16	-30	80	118.0	155	22370.0789
16	50	19.0	49	21.2	14.0	40.5	24.8	16	-30	80	126.0	155	22370.0790
16	60	19.0	49	21.2	14.0	40.5	24.8	16	-30	80	141.0	155	22370.0792
16	70	19.0	49	21.2	14.0	40.5	24.8	16	-30	80	156.0	155	22370.0794
16	80	19.0	49	21.2	14.0	40.5	24.8	16	-30	80	172.0	155	22370.0796
Stainless steel 1.4542, precipitation-hardened													
5	10	5.5	36	12.7	6.0	31.0	15.9	5	-30	80	9.2	24	22380.0712
5	15	5.5	36	12.7	6.0	31.0	15.9	5	-30	80	10.0	24	22380.0713
5	20	5.5	36	12.7	6.0	31.0	15.9	5	-30	80	11.0	24	22380.0714
5	25	5.5	36	12.7	6.0	31.0	15.9	5	-30	80	11.0	24	22380.0715
5	30	5.5	36	12.7	6.0	31.0	15.9	5	-30	80	12.0	24	22380.0716
6	10	7.0	36	12.7	7.0	31.0	15.9	6	-30	80	10.0	35	22380.0722
6	15	7.0	36	12.7	7.0	31.0	15.9	6	-30	80	11.0	35	22380.0723
6	20	7.0	36	12.7	7.0	31.0	15.9	6	-30	80	12.0	35	22380.0724
6	25	7.0	36	12.7	7.0	31.0	15.9	6	-30	80	13.0	35	22380.0725
6	30	7.0	36	12.7	7.0	31.0	15.9	6	-30	80	14.0	35	22380.0726
6	35	7.0	36	12.7	7.0	31.0	15.9	6	-30	80	15.0	35	22380.0727
6	40	7.0	36	12.7	7.0	31.0	15.9	6	-30	80	16.0	35	22380.0728
6	45	7.0	36	12.7	7.0	31.0	15.9	6	-30	80	17.0	35	22380.0729
6	50	7.0	36	12.7	7.0	31.0	15.9	6	-30	80	18.0	35	22380.0730
8	20	9.5	41	16.4	8.2	34.8	19.2	8	-30	80	22.0	63	22380.0734
8	25	9.5	41	16.4	8.2	34.8	19.2	8	-30	80	24.0	63	22380.0735

[1] Shearing resistance similar to DIN 50141

chanhvinh.com

Dimensions								Location hole H11	min.	max.		Shearing resistance, two-shear[1] min.	Art. No.
d_1 -0.04 -0.08	l_1 +0.6	d_2	d_3	d_4	l_2 ±1	l_3	l_4						
[mm]								[mm]	[°C]		[g]	[kN]	
8	**30**	9.5	41	16.4	8.2	34.8	19.2	8	-30	80	26.0	63	22380.0736
8	**35**	9.5	41	16.4	8.2	34.8	19.2	8	-30	80	28.0	63	22380.0737
8	**40**	9.5	41	16.4	8.2	34.8	19.2	8	-30	80	30.0	63	22380.0738
8	**45**	9.5	41	16.4	8.2	34.8	19.2	8	-30	80	31.0	63	22380.0739
8	**50**	9.5	41	16.4	8.2	34.8	19.2	8	-30	80	34.0	63	22380.0740
10	**20**	12.0	41	16.4	9.6	34.8	19.2	10	-30	80	29.0	100	22380.0744
10	**25**	12.0	41	16.4	9.6	34.8	19.2	10	-30	80	32.0	100	22380.0745
10	**30**	12.0	41	16.4	9.6	34.8	19.2	10	-30	80	35.0	100	22380.0746
10	**35**	12.0	41	16.4	9.6	34.8	19.2	10	-30	80	38.0	100	22380.0747
10	**40**	12.0	41	16.4	9.6	34.8	19.2	10	-30	80	41.0	100	22380.0748
10	**45**	12.0	41	16.4	9.6	34.8	19.2	10	-30	80	44.0	100	22380.0749
10	**50**	12.0	41	16.4	9.6	34.8	19.2	10	-30	80	47.0	100	22380.0750
10	**60**	12.0	41	16.4	9.6	34.8	19.2	10	-30	80	52.0	100	22380.0752
12	**25**	14.5	49	21.2	10.6	40.5	24.8	12	-30	80	54.0	144	22380.0765
12	**30**	14.5	49	21.2	10.6	40.5	24.8	12	-30	80	58.0	144	22380.0766
12	**35**	14.5	49	21.2	10.6	40.5	24.8	12	-30	80	62.0	144	22380.0767
12	**40**	14.5	49	21.2	10.6	40.5	24.8	12	-30	80	66.0	144	22380.0768
12	**45**	14.5	49	21.2	10.6	40.5	24.8	12	-30	80	70.0	144	22380.0769
12	**50**	14.5	49	21.2	10.6	40.5	24.8	12	-30	80	74.0	144	22380.0770
12	**60**	14.5	49	21.2	10.6	40.5	24.8	12	-30	80	83.0	144	22380.0772
12	**70**	14.5	49	21.2	10.6	40.5	24.8	12	-30	80	91.0	144	22380.0774
12	**80**	14.5	49	21.2	10.6	40.5	24.8	12	-30	80	100.0	144	22380.0776
16	**30**	19.0	49	21.2	14.0	40.5	24.8	16	-30	80	90.0	257	22380.0786
16	**35**	19.0	49	21.2	14.0	40.5	24.8	16	-30	80	97.0	257	22380.0787
16	**40**	19.0	49	21.2	14.0	40.5	24.8	16	-30	80	109.0	257	22380.0788
16	**45**	19.0	49	21.2	14.0	40.5	24.8	16	-30	80	112.0	257	22380.0789
16	**50**	19.0	49	21.2	14.0	40.5	24.8	16	-30	80	124.0	257	22380.0790
16	**60**	19.0	49	21.2	14.0	40.5	24.8	16	-30	80	140.0	257	22380.0792
16	**70**	19.0	49	21.2	14.0	40.5	24.8	16	-30	80	150.0	257	22380.0794
16	**80**	19.0	49	21.2	14.0	40.5	24.8	16	-30	80	170.0	257	22380.0796

[1] Shearing resistance similar to DIN 50141

chanhvinh.com

Application example

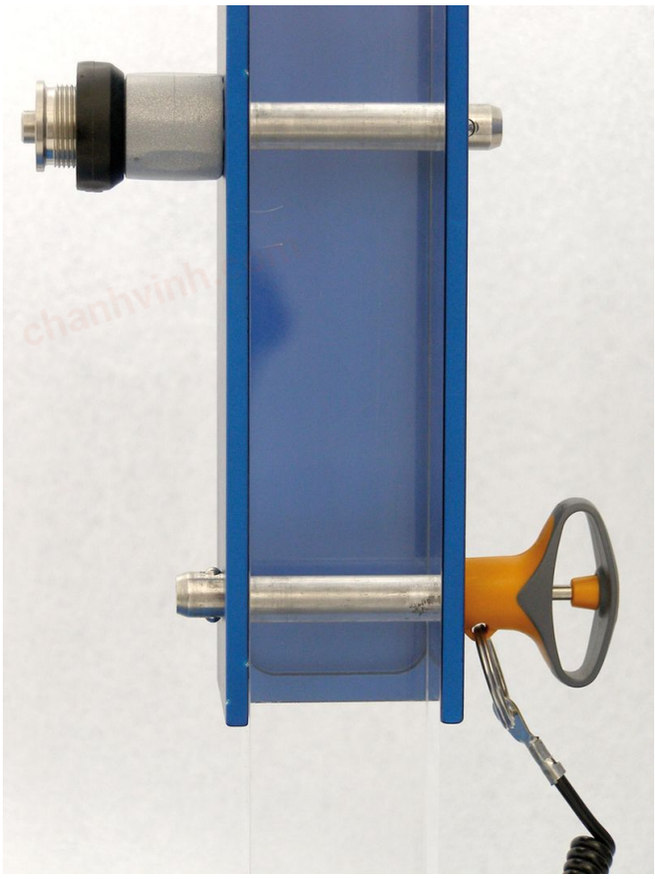

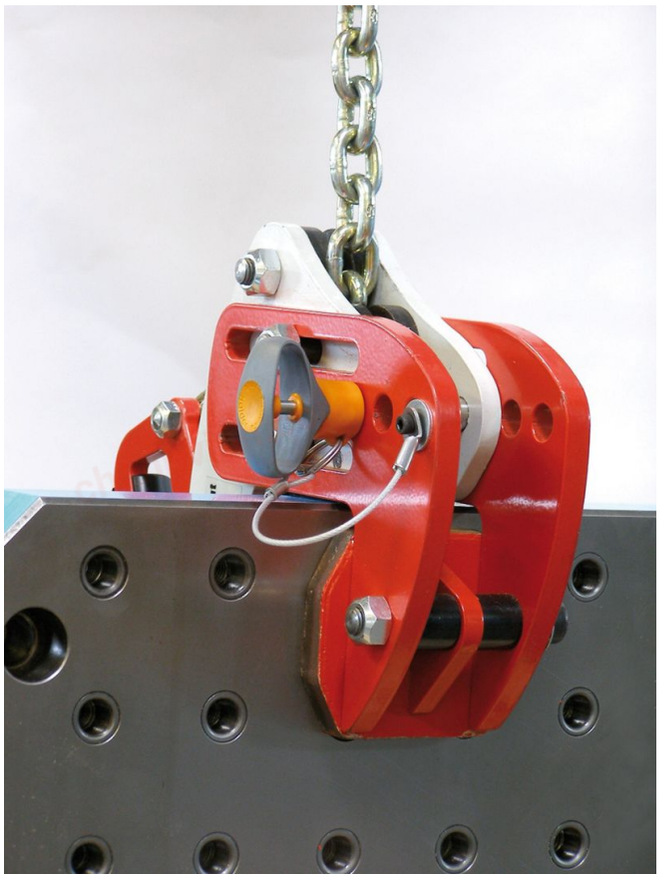

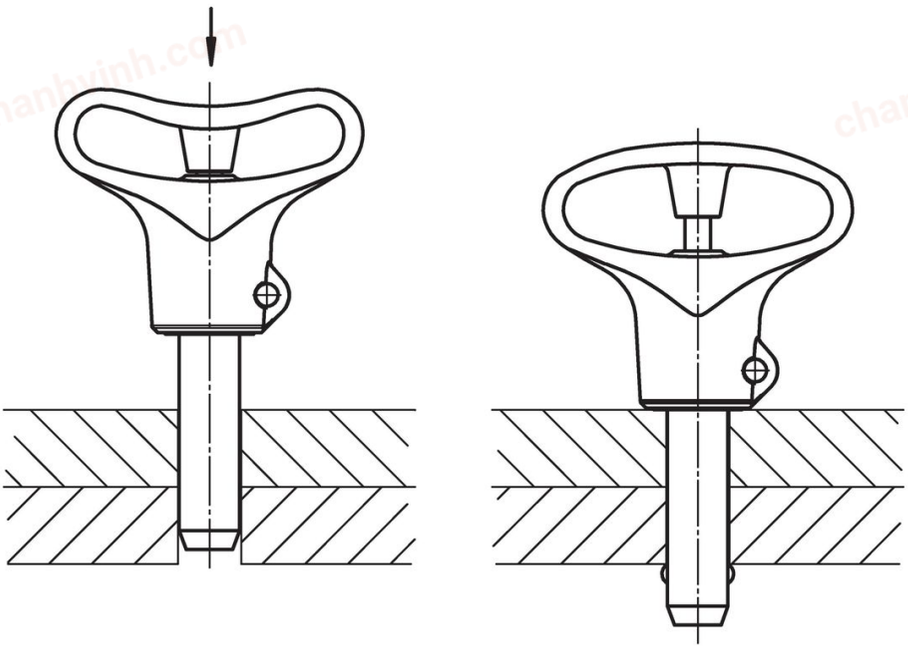

chanhvinh.com

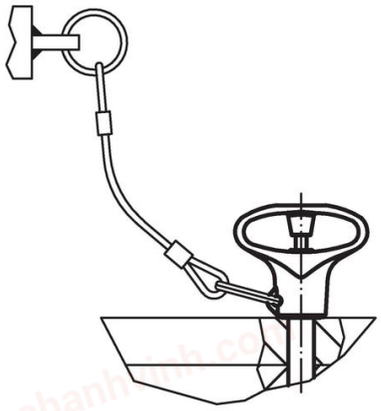

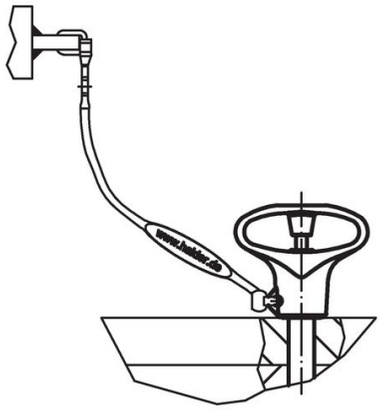

Compliance

RoHS-compliant
Compliant with Directive 2011/65/EU [RoHS].

Does not contain SVHC substances
No SVHC substances with more than 0.1% w/w contained - SVHC list [REACH] as of 04.02.2026.

SCIP-code
N/A

Contains Proposition 65 substances
Nickel can cause cancer from exposure.
https://www.P65Warnings.ca.gov/

Free from Conflict Minerals
This product does not contain any substances designated as "conflict minerals" such as tantalum, tin, gold or tungsten from the Democratic Republic of Congo or adjacent countries.

POP-compliant
Contains no persistent organic pollutants – Stockholm Convention [POP] as of September 2025.

PFAS-compliant
Contains no per- and polyfluoroalkyl substances (PFAS).

TSCA-compliant
Agent concentration in this product does not exceed the specified threshold.