chanhvinh.com

Retaining Cables • for threaded lock pin
EH 22355.



Product Description

These retaining cables are provided for attachment to the threaded lock pins EH 22355./EH22356 and act as loss prevention device.

Material

Retaining cable
- Stainless steel

Coating retaining cable
- Thermoplastic PA 6 coated, black

Attaching ring
- Stainless Steel

Holding clip
- Thermoplastic PA 6, black, dull similar to RAL 9005

Eyelet
- Stainless steel

Press clamp
- Aluminium Al

More information

Notes

Customized design on request.

Further products

- Retaining Cables

Drawing

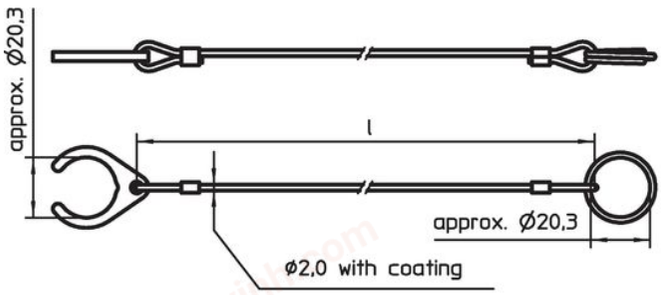

picture 1

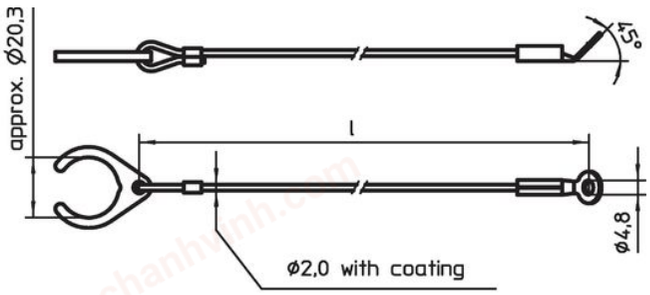

picture 2

Order information

Dimensions l [mm]	[g]	Art. No.
stainless steel, with holding clip and attaching ring – picture 1, Thermoplastic PA 6 coated, black		
150	13.0	22355.6001
200	8.2	22355.6002
300	15.0	22355.6003
stainless steel, with holding clip and eyelet – picture 2, Thermoplastic PA 6 coated, black		
150	9.9	22355.6011
200	7.6	22355.6012
300	15.0	22355.6013

chanhvinh.com

Application example

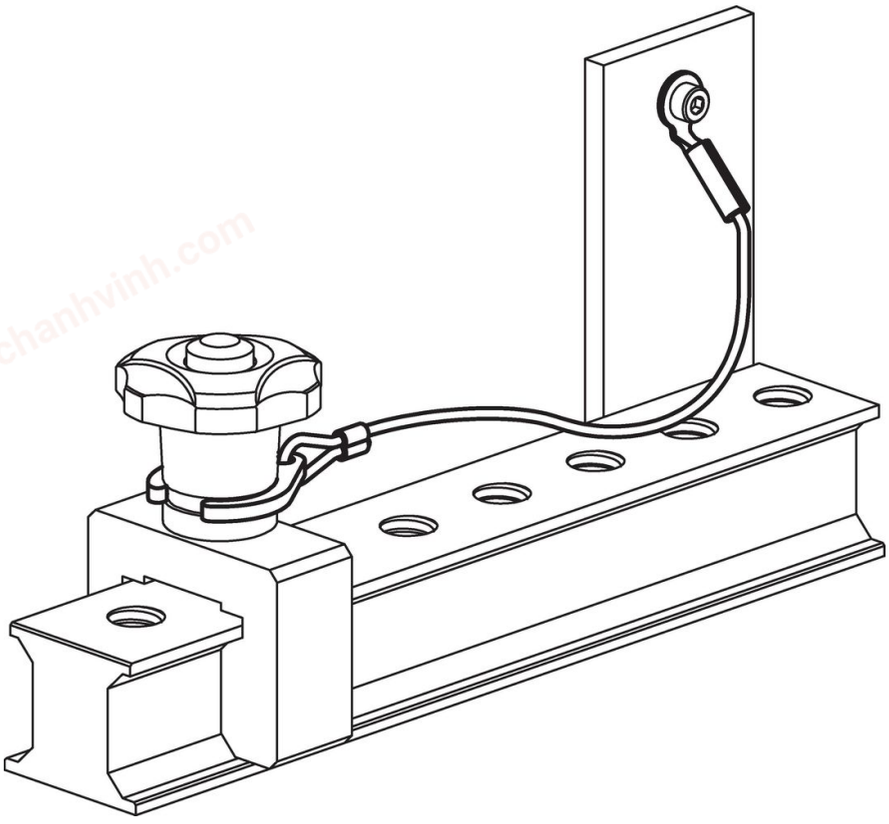

Compliance

RoHS-compliant
Compliant with Directive 2011/65/EU [RoHS].

Does not contain SVHC substances
No SVHC substances with more than 0.1% w/w contained - SVHC list [REACH] as of 04.02.2026.

SCIP-code
N/A

Does not contain Proposition 65 substances
No Proposition 65 substances included.
https://www.P65Warnings.ca.gov/

Free from Conflict Minerals
This product does not contain any substances designated as "conflict minerals" such as tantalum, tin, gold or tungsten from the Democratic Republic of Congo or adjacent countries.

POP-compliant
Contains no persistent organic pollutants – Stockholm Convention [POP] as of September 2025.

PFAS-compliant
Contains no per- and polyfluoroalkyl substances (PFAS).

TSCA-compliant
Agent concentration in this product does not exceed the specified threshold.