chanhvinh.com

Threaded Lifting Pins • self-locking, with handle

EH 22354.

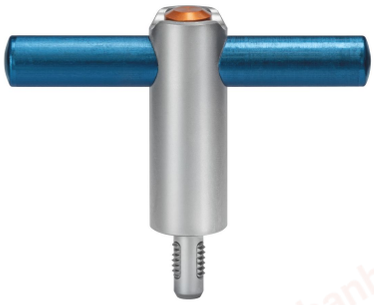

Product Description

The carrying element can be used universally for transporting workpieces, workholding systems, components, containers etc. using manual force.
Heavy-duty lifting element with handle for quick and easy use. For lifting loads, the threaded lifting pin is inserted into a threaded hole. In contrast to a ringbolt, time-consuming screwing in and out is therefore unnecessary.
Corrosion and weathering resistant, thus also suitable for outdoor application. High-strength, precipitation-hardened pin offering exceptional load capacity.

Material

Pin part
- Stainless steel 1.4542, precipitation-hardened

Handle
- Aluminium, blue anodised

Press button
- Aluminium, orange, anodised

Threaded element
- Stainless steel 1.4542, precipitation-hardened

Spring
- Stainless steel

Assembly

Threaded lifting pins can be mounted into a thread that is true to gauge.

Mounting:
1. Press in the button and hold it down.
2. Insert the threaded lifting pin.
3. Release the button (The button must be back in its original position. A clearly visible green marking on the press button indicates the correct position.).
4. Tighten the threaded lifting pin by hand, until it bears compleately on the bearing surface (mandatory).
5. It must be ensured that the threaded segments are engaged in the mounting thread.

Dismantling:
1. Unscrew the threaded lifting pin approx. a quarter of a turn anticlockwise.
2. Press in the button and hold it down.
3. Remove the threaded lifting pin.
4. Release the button.

Operation

Each threaded lifting pin is supplied with operating instructions. This document is also available for download as a PDF.

More information

Further products

- Lifting Pins, self-locking, pneumatically operated
- Lifting Pins, self-locking, pneumatically operated, stainless steel
- Lifting Pins, self-locking
- Lifting Pins, self-locking, stainless steel

Drawing

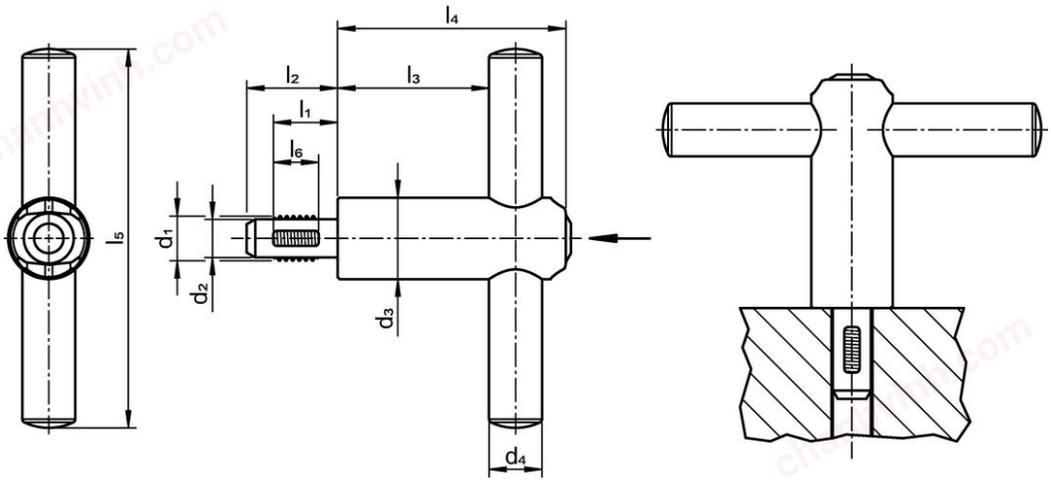

chanhvinh.com

Order information

Dimensions										Load capacity F	Locating thread	max.		Art. No.
d_1	l_1	d_2 -0.07	d_3	d_4	l_2	l_3	l_4	l_5	l_6					
[mm]										[N]	[mm]	[°C]	[g]	
M 8	**12**	6.62	21.5	14	17.3	40	60.3	100	8	500	M 8	250	195	22354.5008
M10	**14**	8.35	21.5	14	20.0	40	60.3	100	10	500	M10	250	198	22354.5010
M12	**17**	10.07	21.5	14	24.0	40	60.3	100	12	500	M12	250	198	22354.5012

Application example









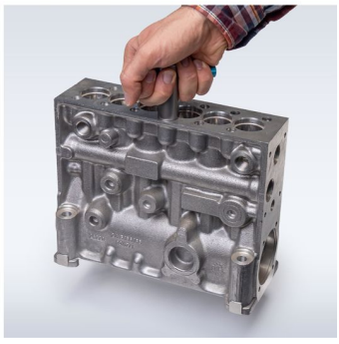

chanhvinh.com

Compliance

RoHS-compliant
Contains lead – Compliant with Exemption 6(b)-II.

Contains SVHC substances >0,1% w/w
Contains lead - SVHC list [REACH] as of 04.02.2026.

SCIP-code
N/A

Contains Proposition 65 substances


Nickel can cause cancer from exposure. / Lead can lead to cancer, developmental disorders, and reproductive damage in men and to reproductive damage in women from exposure.
https://www.P65Warnings.ca.gov/

Free from Conflict Minerals
This product does not contain any substances designated as "conflict minerals" such as tantalum, tin, gold or tungsten from the Democratic Republic of Congo or adjacent countries.

POP-compliant
Contains no persistent organic pollutants – Stockholm Convention [POP] as of September 2025.

PFAS-compliant
Contains no per- and polyfluoroalkyl substances (PFAS).

TSCA-compliant
Agent concentration in this product does not exceed the specified threshold.