chanhvinh.com

Threaded Lifting Pins PLUS • self-locking

EH 22352.



Product Description

Heavy-duty lifting element for quick and easy use, with moveable shackle and locking stud to provide protection against unintentional unlocking. For lifting loads, the threaded lifting pin is inserted into a threaded hole. In contrast to a ringbolt, time-consuming screwing in and out is therefore unnecessary.
A circumferential green indicator ring enables clear visual inspection of the correct installation status. The actuation area with grip recess allows safe and ergonomic pressing of the button while ensuring unrestricted visibility of the indicator ring.
Thanks to identical nominal dimensions, the threaded lifting pin can be replaced directly with the threaded lifting pin PLUS.
This article group is available in heat-treated steel and in stainless steel. Both versions are corrosion-protected. The stainless steel version offers increased corrosion and weather resistance and is ideally suited for outdoor use. The high-strength, precipitation-hardened pin is designed for high mechanical loads.
This threaded lifting pin is characterised by the following features:

- Quick readiness for use thanks to tool-free installation without screwing process
- Visual installation control by clearly visible green indicator ring
- Movable shackle for flexible applications
- Ergonomic operation thanks to the grip recess, allowing comfortable actuation of the push button
- Safety bar to prevent unintentional loosening
- Corrosion-protected versions, optionally in stainless steel for increased weather resistance
- Designed for high mechanical loads

Material

Pin part

- Heat-treated steel, tempered, manganese phosphated
- Stainless steel 1.4542, precipitation-hardened

Press button

- Aluminium, orange, anodised

Threaded element

- Stainless steel 1.4542, precipitation-hardened

Shackle

- Heat-treated steel, tempered, manganese phosphated
- Stainless steel 1.4571

Spring

- Stainless Steel

- stainless steel, painted green

Assembly

Threaded lifting pins can be mounted into a thread that is true to gauge.

Mounting:

1. Press in the button and hold it down.
2. Insert the threaded lifting pin.
3. Release the button (The button must be back in its original position. A clearly visible green marking on the press button indicates the correct position.).
4. Tighten the threaded lifting pin by hand, until it bears compleately on the bearing surface (mandatory).
5. It must be ensured that the threaded segments are engaged in the mounting thread.

Dismantling:

1. Unscrew the threaded lifting pin approx. a quarter of a turn anticlockwise.
2. Press in the button and hold it down.
3. Remove the threaded lifting pin.
4. Release the button.

Operation

Each lifting pin is supplied with a short instruction manual.
This document and a detailed instruction manual are also available for download as PDF files.

More information

Notes

When loads are picked up with more than one threaded lifting pin (load directions F_2 and F_3), we recommended that you use the rotating version EH 22353./EH 2B353. to ensure use that is in line with application requirements.

Further products

- Threaded Lifting Pins PLUS, self-locking, with rotatable shackle - RFID
- Threaded Lifting Pins PLUS, self-locking - INCH

chanhvinh.com

- Threaded Lifting Pins PLUS, self-locking, with rotatable shackle - RFID (INCH)

Drawing

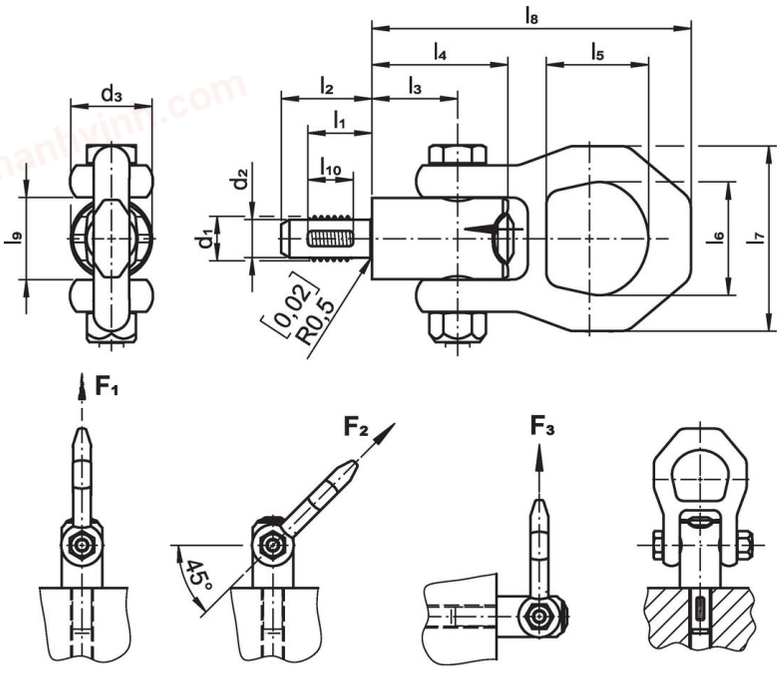

Order information

Dimensions													Load capacity according to DIN EN 13155			Locating thread			Art. No.
d_1	l_1	d_2 -0.07	d_3	l_2	l_3	l_4	l_5	l_6	l_7	l_8	l_9	l_{10}	F_1	F_2	F_3		max.		
[mm]													[kN]			[mm]	[°C]		
Heat-treated steel																			
M 8	**12**	6.62	21.5	17.3	17.7	31.0	27.0	30.0	49	79.5	21.5	8	2.1	1.0	0.9	M 8	250	258.0 g	22352.4008
M10	**14**	8.35	21.5	20.0	17.7	31.0	27.0	30.0	49	79.5	21.5	10	3.9	2.1	1.9	M10	250	262.0 g	22352.4010
M12	**17**	10.07	21.5	24.0	22.7	36.0	27.0	30.0	49	84.5	21.5	12	6.2	2.7	2.3	M12	250	278.0 g	22352.4012
M14	**17**	11.80	21.5	24.0	22.7	36.0	27.0	30.0	49	84.5	21.5	12	7.8	4.2	3.1	M14	250	278.0 g	22352.4014
M16	**17**	13.80	21.5	24.0	25.0	43.5	32.6	36.0	56	102.5	26.0	12	8.4	5.5	4.8	M16	250	516.0 g	22352.4016
M20	**22**	17.25	30.0	30.0	29.5	48.0	32.6	36.0	56	107.0	26.0	17	16.6	8.9	7.0	M20	250	564.0 g	22352.4020
M24	**27**	20.70	36.0	36.0	35.0	56.0	50.6	49.8	82	152.0	36.0	22	23.0	13.4	10.3	M24	250	1.3 kg	22352.4024
M27	**31**	23.67	45.0	40.0	35.0	56.0	50.6	49.8	82	152.0	36.0	26	33.8	19.5	16.2	M27	250	1.7 kg	22352.4027
M30	**35**	26.10	45.0	44.0	35.0	56.0	50.6	49.8	82	152.0	36.0	30	42.3	28.3	19.1	M30	250	1.7 kg	22352.4030
Stainless steel																			
M 8	**12**	6.62	21.5	17.3	17.7	31.0	27.0	30.0	49	79.5	21.5	8	2.1	1.0	0.9	M 8	250	263.0 g	22352.5008
M10	**14**	8.35	21.5	20.0	17.7	31.0	27.0	30.0	49	79.5	21.5	10	3.9	2.1	1.9	M10	250	266.0 g	22352.5010
M12	**17**	10.07	21.5	24.0	22.7	36.0	27.0	30.0	49	84.5	21.5	12	6.2	2.7	2.3	M12	250	281.0 g	22352.5012
M16	**17**	13.80	21.5	24.0	25.0	43.5	32.6	36.0	56	102.5	26.0	12	8.4	5.5	4.8	M16	250	519.0 g	22352.5016
M20	**22**	17.25	30.0	30.0	29.5	48.0	32.6	36.0	56	107.0	26.0	17	16.6	8.9	7.0	M20	250	562.0 g	22352.5020
M24	**27**	20.70	36.0	36.0	35.0	56.0	50.6	49.8	82	152.0	36.0	22	23.0	13.4	10.3	M24	250	1.3 kg	22352.5024

chanhvinh.com

Application example





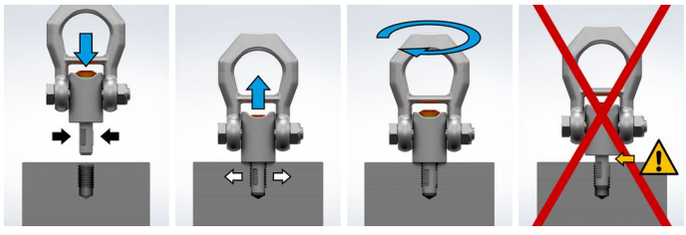

chanhvinh.com

chanhvinh.com

Information on the load capacities

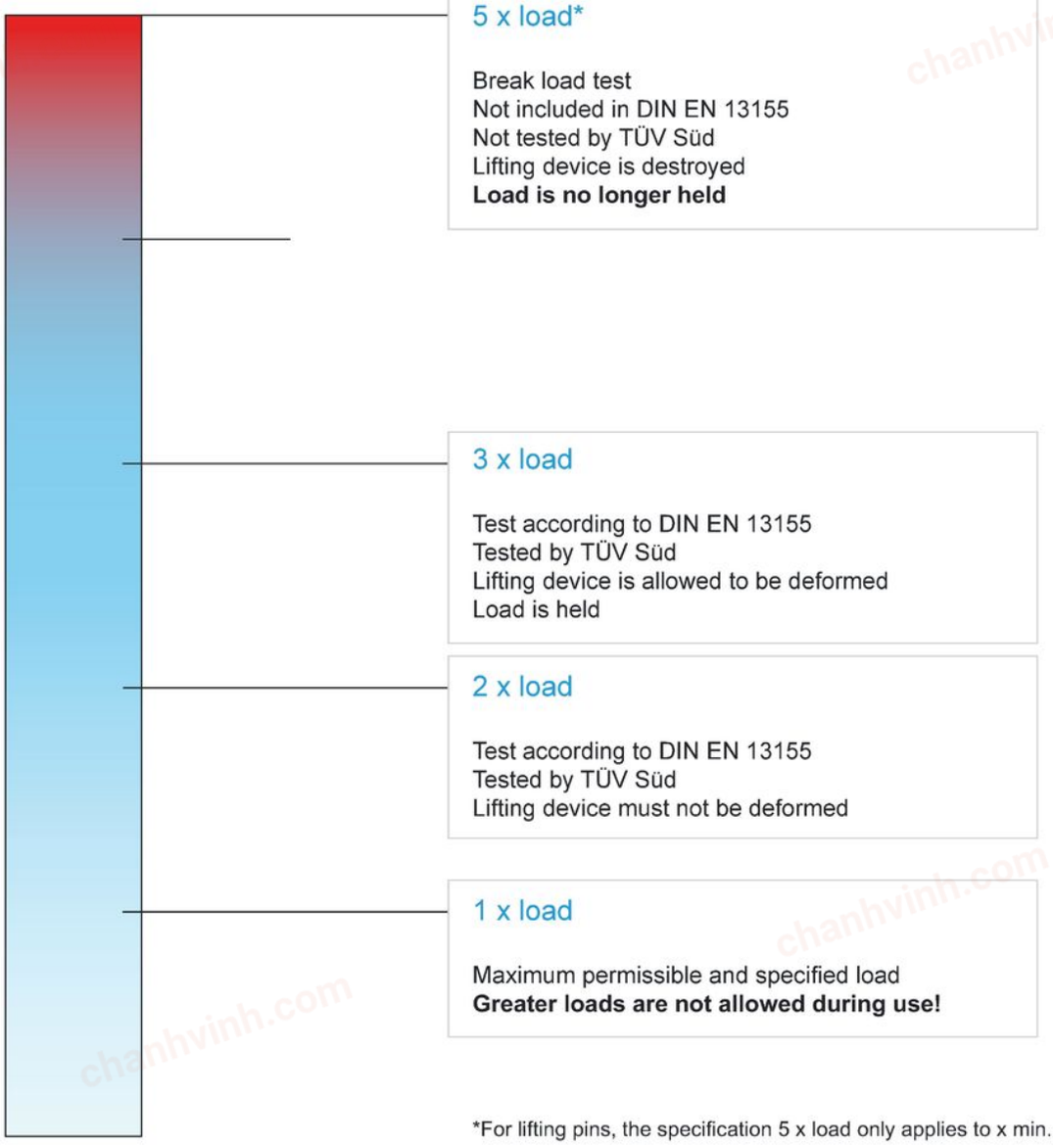

*For lifting pins, the specification 5 x load only applies to x min.

chanhvinh.com

Compliance

RoHS-compliant
Contains lead – Compliant with Exemption 6(b)-II.

Contains SVHC substances >0,1% w/w
Contains lead - SVHC list [REACH] as of 04.02.2026.

SCIP-code
N/A

Contains Proposition 65 substances



Nickel can cause cancer from exposure. / Lead can lead to cancer, developmental disorders, and reproductive damage in men and to reproductive damage in women from exposure.
https://www.P65Warnings.ca.gov/

Free from Conflict Minerals
This product does not contain any substances designated as "conflict minerals" such as tantalum, tin, gold or tungsten from the Democratic Republic of Congo or adjacent countries.

POP-compliant
Contains no persistent organic pollutants – Stockholm Convention [POP] as of September 2025.

PFAS-compliant
Contains no per- and polyfluoroalkyl substances (PFAS).

TSCA-compliant
Agent concentration in this product does not exceed the specified threshold.