chanhvinh.com

Locating Bushings with Seal, plain • for lifting pins

EH 22350.



Product Description

The seal prevents the penetration of liquid and dirt. The bushing is therefore especially suitable for use in the open air.
Locating bushings are used for quick and safe locating of lifting pins EH 22350 / EH 22351.
This design is suitable for applications which require installation flush to the surface.
A face wrench is required for installation. As an accessory, we offer a standard adjustable face wrench, offset, and a face and socket wrench. In combination with a socket-wrench/screwdriver, the face and socket wrench is especially suitable for use if space is restricted.
Corrosion and abrasion resistant.

Material

Bushing
- Stainless steel 1.4542, precipitation-hardened

O-ring
- NBR

Spring
- Stainless steel

Assembly

Safe tolerances and consistent function.
Easily incorporated into different materials
This version can be easily installed via optional assembly tool.
Can be mounted in blind holes.
For thin-walled parts, lock nuts are used for assembly.

More information

References

Assembly tool face wrench or adjustable face wrench, offset refer to EH 22350.

Further products

- Face Wrench (socket wrench insert)
- Adjustable Face Wrench, offset

Drawing

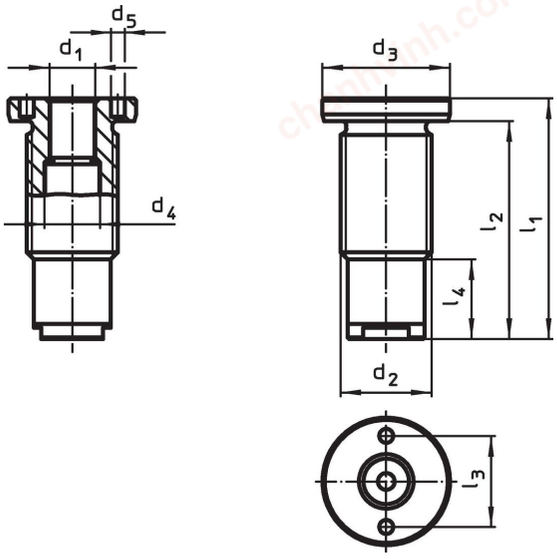

Order information

Dimensions		For nominal length	Dimensions							Tight-ening torque	x	Load capacity			For lifting pin		Art. No.
d_1 H11	d_2		d_3 -0.2	d_4 +0.3	d_5 +0.1	l_1	l_2	l_3	l_4	max.		F_1	F_2	F_3			
[mm]		[mm]	[mm]							[Nm]	[mm]	[kN]				[g]	
8	M16 x 1,5	10	24	9.9	3.1	37.5	32.5	16	12.5	75	1.5	1.5	1.2	0.5	22350.0601 / .0701	47	22350.1960
10	M20 x 1,5	15	28	12.3	5.1	51.0	45.0	20	21.0	100	1.5	2.7	2.4	2.1	22350.0621 / .0721	92	22350.1961
12	M24 x 1,5	15	32	14.4	5.1	53.0	47.0	22	21.0	150	1.5	3.5	3.2	2.8	22350.0631 / .0731	136	22350.1962
16	M30 x 2	25	39	19.3	5.1	78.0	72.0	30	33.0	200	1.5	4.8	4.5	4.1	22350.0641 / .0741	254	22350.1963

chanhvinh.com

Application example

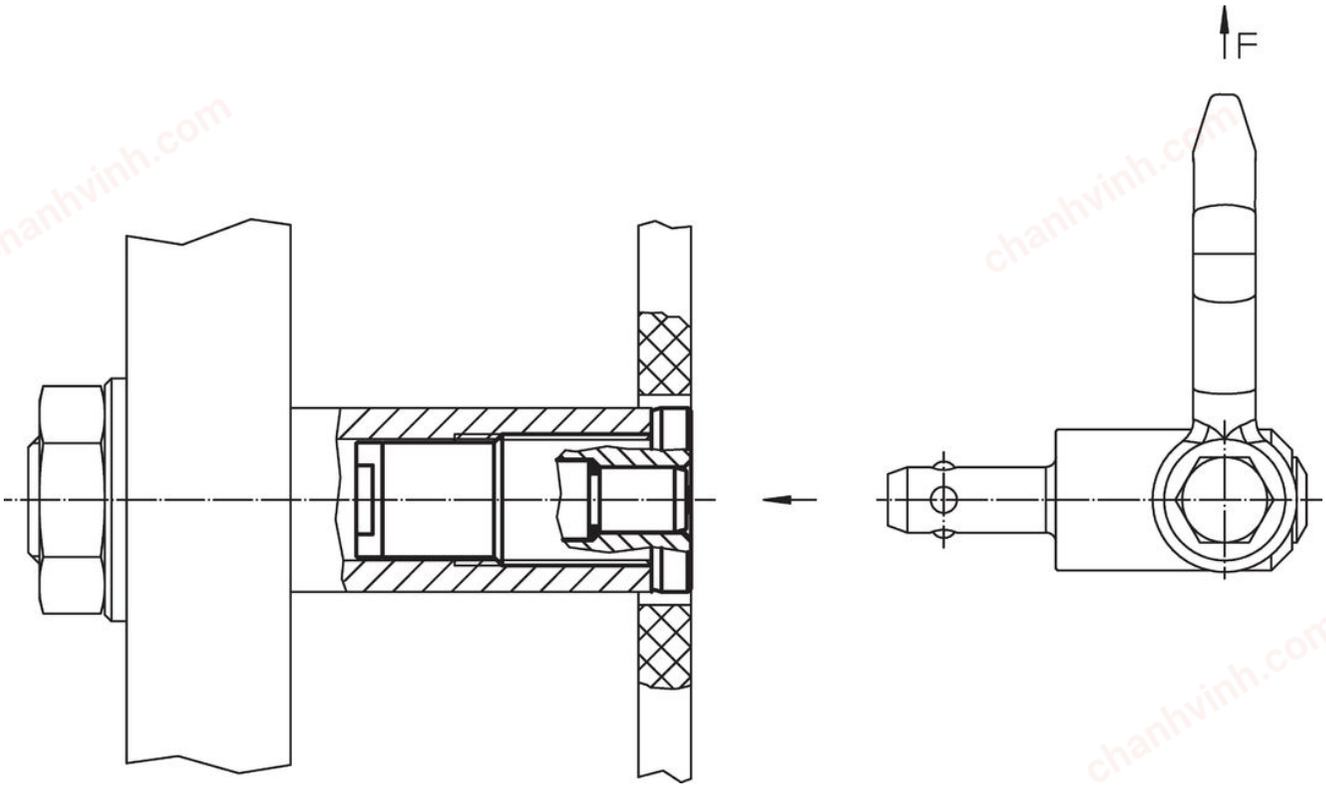

Compliance

RoHS-compliant
Compliant with Directive 2011/65/EU [RoHS].

Does not contain SVHC substances
No SVHC substances with more than 0.1% w/w contained - SVHC list [REACH] as of 04.02.2026.

SCIP-code
N/A

Contains Proposition 65 substances

Nickel can cause cancer from exposure.
https://www.P65Warnings.ca.gov/

Free from Conflict Minerals
This product does not contain any substances designated as "conflict minerals" such as tantalum, tin, gold or tungsten from the Democratic Republic of Congo or adjacent countries.

POP-compliant
Contains no persistent organic pollutants – Stockholm Convention [POP] as of September 2025.

PFAS-compliant
Contains no per- and polyfluoroalkyl substances (PFAS).

TSCA-compliant
Agent concentration in this product does not exceed the specified threshold.