chanhvinh.com

Lifting Pins • self-locking, stainless steel

EH 22350.



Product Description

Heavy-duty lifting element for quick and easy use, with moveable shackle and locking stud to provide protection against unintentional unlocking. Special lifting devices, e.g. threads for ring bolts, are no longer required on the workpiece.
Corrosion and weathering resistant, thus also suitable for outdoor application. High-strength, precipitation-hardened pin offering exceptional load capacity.

Material

Pin part
- Stainless steel 1.4542, precipitation-hardened

Press button
- Aluminium, red anodised

Shackle
- Stainless steel 1.4571

Spring
- Stainless Steel

Assembly

For use, H11 boreholes are sufficient.

Mounting:
1. Press in the button and hold it down
2. Insert the lifting pin
3. Release the button (The button must be back in its original position)

Dismantling:
1. Press in the button and hold it down.
2. Remove the lifting pin.
3. Release the button.

Operation

Each lifting pin contains an instruction manual with an EC Declaration of Conformity.

More information

Accessories

As accessories, we offer matching locating bushings for d_1 = 8, 10, 12, 16 and 20

Further products

- Lifting Pins, self-locking, pneumatically operated
- Lifting Pins, self-locking, pneumatically operated, stainless steel
- Lifting Pins, self-locking
- Locating Bushings, for lifting pins
- Locating Bushings, plain, for lifting pins
- Locating Bushings with Seal, plain, for lifting pins
- Lifting Pins, self-locking, with handle
- Threaded Lifting Pins, self-locking
- Threaded Lifting Pins, self-locking, for centre holes according to DIN 332
- Threaded Lifting Pins, self-locking, with rotatable shackle
- Threaded Lifting Pins, self-locking - INCH
- Threaded Lifting Pins, self-locking, with rotatable shackle - INCH
- Threaded Lifting Pins, self-locking, with handle

chanhvinh.com

Drawing

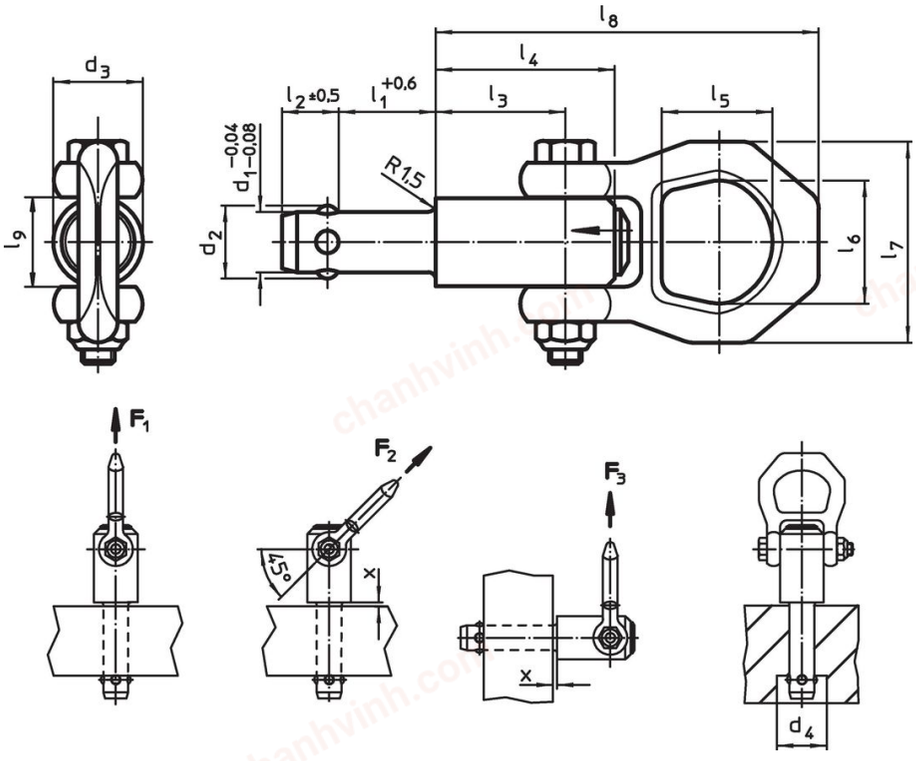

Order information

Dimensions													Load capacity according to DIN EN 13155					Location hole H11	max.		Art. No.
d_1 -0.04 -0.08	l_1 +0.6	d_2	d_3	d_4 min.	l_2 ±0.5	l_3	l_4	l_5	l_6	l_7	l_8	l_9	F_1	F_2	F_3	x min.	x max.				
[mm]													[kN]			[mm]		[mm]	[°C]	[g]	
8.0	**10**	9.35	21.5	9.85	8.75	25.7	36.0	27.0	30	49	87.5	21.5	1.5	1.2	0.5	1.5	5	8.0	250	270	22350.0701
8.0	**15**	9.35	21.5	9.85	8.75	25.7	36.0	27.0	30	49	87.5	21.5	1.5	1.2	0.5	1.5	10	8.0	250	270	22350.0702
8.0	**25**	9.35	21.5	9.85	8.75	25.7	36.0	27.0	30	49	87.5	21.5	1.5	1.2	0.5	1.5	15	8.0	250	272	22350.0704
8.0	**35**	9.35	21.5	9.85	8.75	25.7	36.0	27.0	30	49	87.5	21.5	1.5	1.2	0.5	1.5	15	8.0	250	280	22350.0706
8.0	**50**	9.35	21.5	9.85	8.75	25.7	36.0	27.0	30	49	87.5	21.5	1.5	1.2	0.5	1.5	15	8.0	250	285	22350.0708
8.3	**10**	9.65	21.5	10.05	8.75	25.7	36.0	27.0	30	49	87.5	21.5	1.5	1.2	0.5	1.5	5	8.3	250	228	22350.0711
8.3	**15**	9.65	21.5	10.05	8.75	25.7	36.0	27.0	30	49	87.5	21.5	1.5	1.2	0.5	1.5	10	8.3	250	229	22350.0712
8.3	**25**	9.65	21.5	10.05	8.75	25.7	36.0	27.0	30	49	87.5	21.5	1.5	1.2	0.5	1.5	15	8.3	250	233	22350.0714
8.3	**35**	9.65	21.5	10.05	8.75	25.7	36.0	27.0	30	49	87.5	21.5	1.5	1.2	0.5	1.5	15	8.3	250	282	22350.0716
10.0	**10**	11.70	21.5	12.20	10.20	25.7	36.0	27.0	30	49	87.5	21.5	2.7	2.4	2.1	1.5	10	10.0	250	274	22350.0720
10.0	**15**	11.70	21.5	12.20	10.20	25.7	36.0	27.0	30	49	87.5	21.5	2.7	2.4	2.1	1.5	10	10.0	250	270	22350.0721
10.0	**25**	11.70	21.5	12.20	10.20	25.7	36.0	27.0	30	49	87.5	21.5	2.7	2.4	2.1	1.5	10	10.0	250	280	22350.0723
10.0	**35**	11.70	21.5	12.20	10.20	25.7	36.0	27.0	30	49	87.5	21.5	2.7	2.4	2.1	1.5	10	10.0	250	289	22350.0725
10.0	**50**	11.70	21.5	12.20	10.20	25.7	36.0	27.0	30	49	87.5	21.5	2.7	2.4	2.1	1.5	10	10.0	250	296	22350.0727
10.0	**75**	11.70	21.5	12.20	10.20	25.7	36.0	27.0	30	49	87.5	21.5	2.7	2.4	2.1	1.5	10	10.0	250	341	22350.0729
12.0	**10**	14.20	21.5	14.70	11.00	25.7	36.0	27.0	30	49	87.5	21.5	3.5	3.2	2.8	1.5	10	12.0	250	280	22350.0730
12.0	**15**	14.20	21.5	14.70	11.00	25.7	36.0	27.0	30	49	87.5	21.5	3.5	3.2	2.8	1.5	10	12.0	250	286	22350.0731
12.0	**25**	14.20	21.5	14.70	11.00	25.7	36.0	27.0	30	49	87.5	21.5	3.5	3.2	2.8	1.5	15	12.0	250	291	22350.0733
12.0	**35**	14.20	21.5	14.70	11.00	25.7	36.0	27.0	30	49	87.5	21.5	3.5	3.2	2.8	1.5	15	12.0	250	300	22350.0735
12.0	**50**	14.20	21.5	14.70	11.00	25.7	36.0	27.0	30	49	87.5	21.5	3.5	3.2	2.8	1.5	15	12.0	250	315	22350.0737
12.0	**75**	14.20	21.5	14.70	11.00	25.7	36.0	27.0	30	49	87.5	21.5	3.5	3.2	2.8	1.5	15	12.0	250	368	22350.0739
13.8	**25**	16.20	21.5	16.70	13.00	25.7	36.0	27.0	30	49	87.5	21.5	3.8	3.5	2.8	1.5	15	13.8	250	309	22350.0751
13.8	**50**	16.20	21.5	16.70	13.00	25.7	36.0	27.0	30	49	87.5	21.5	3.8	3.5	2.8	1.5	35	13.8	250	366	22350.0753
13.8	**75**	16.20	21.5	16.70	13.00	25.7	36.0	27.0	30	49	87.5	21.5	3.8	3.5	2.8	1.5	35	13.8	250	390	22350.0755
16.0	**15**	18.60	25.0	19.20	15.10	31.0	44.5	27.0	30	49	92.8	21.5	4.8	4.5	4.1	1.5	15	16.0	250	378	22350.0740
16.0	**25**	18.60	25.0	19.20	15.10	31.0	44.5	27.0	30	49	92.8	21.5	4.8	4.5	4.1	1.5	15	16.0	250	392	22350.0741
16.0	**35**	18.60	25.0	19.20	15.10	31.0	44.5	27.0	30	49	92.8	21.5	4.8	4.5	4.1	1.5	15	16.0	250	409	22350.0742
16.0	**50**	18.60	25.0	19.20	15.10	31.0	44.5	27.0	30	49	92.8	21.5	4.8	4.5	4.1	1.5	35	16.0	250	429	22350.0743

chanhvinh.com

Dimensions													Load capacity according to DIN EN 13155					Location hole H11	max.		Art. No.
d_1 -0.04 -0.08	l_1 +0.6	d_2	d_3	d_4 min.	l_2 ±0.5	l_3	l_4	l_5	l_6	l_7	l_8	l_9	F_1	F_2	F_3	x min.	x max.				
[mm]													[kN]			[mm]		[mm]	[°C]	[g]	
16.0	**75**	18.60	25.0	19.20	15.10	31.0	44.5	27.0	30	49	92.8	21.5	4.8	4.5	4.1	1.5	40	16.0	250	470	22350.0745
18.0	**25**	21.50	30.0	22.20	17.30	36.5	52.0	32.6	36	56	114.0	26.0	10.0	8.0	5.0	1.5	15	18.0	250	522	22350.0763
18.0	**35**	21.50	30.0	22.20	17.30	36.5	52.0	32.6	36	56	114.0	26.0	10.0	8.0	5.0	1.5	25	18.0	250	542	22350.0765
18.0	**50**	21.50	30.0	22.20	17.30	36.5	52.0	32.6	36	56	114.0	26.0	10.0	8.0	5.0	1.5	35	18.0	250	569	22350.0767
18.0	**75**	21.50	30.0	22.20	17.30	36.5	52.0	32.6	36	56	114.0	26.0	10.0	8.0	5.0	1.5	40	18.0	250	719	22350.0769
20.0	**25**	24.50	30.0	25.20	19.70	36.5	52.0	32.6	36	56	114.0	26.0	10.0	8.5	6.5	1.5	25	20.0	250	547	22350.0771
20.0	**35**	24.50	30.0	25.20	19.70	36.5	52.0	32.6	36	56	114.0	26.0	10.0	8.5	6.5	1.5	25	20.0	250	571	22350.0772
20.0	**50**	24.50	30.0	25.20	19.70	36.5	52.0	32.6	36	56	114.0	26.0	10.0	8.5	6.5	1.5	25	20.0	250	707	22350.0773
20.0	**75**	24.50	30.0	25.20	19.70	36.5	52.0	32.6	36	56	114.0	26.0	10.0	8.5	6.5	1.5	30	20.0	250	765	22350.0775

Application example





chanhvinh.com

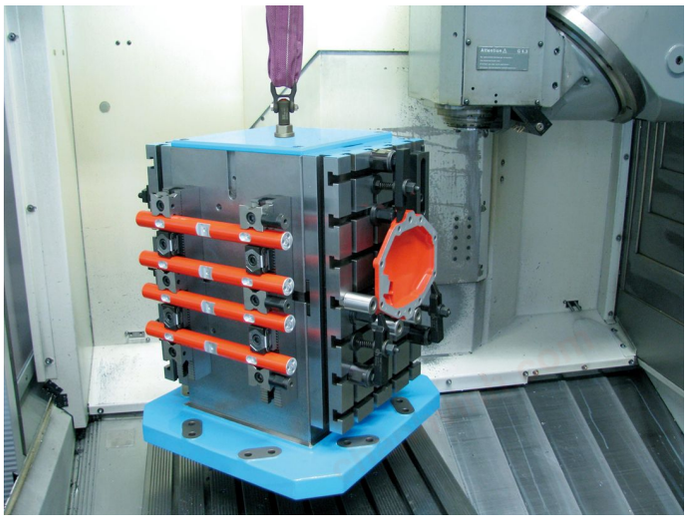

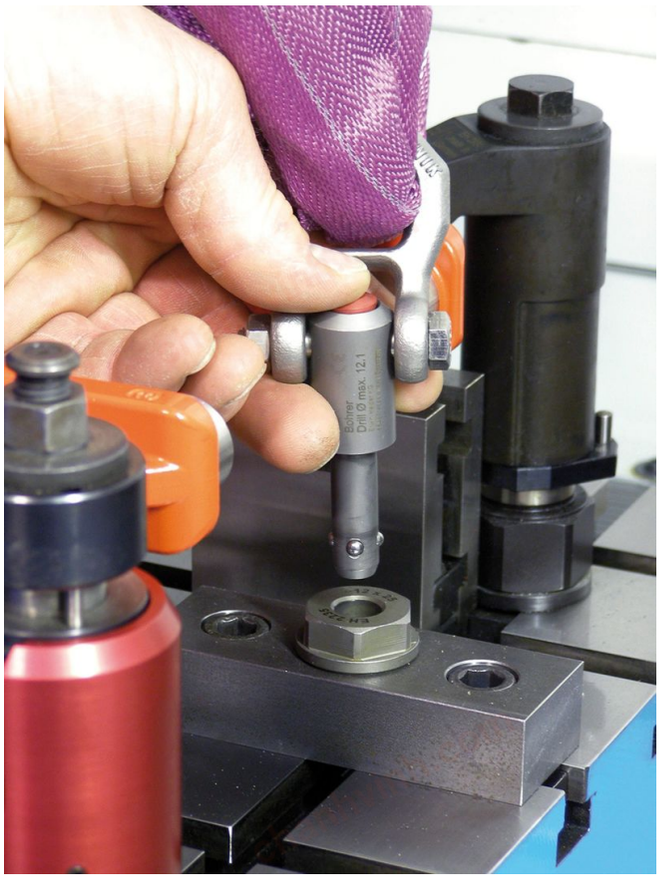



chanhvinh.com

chanhvinh.com

chanhvinh.com

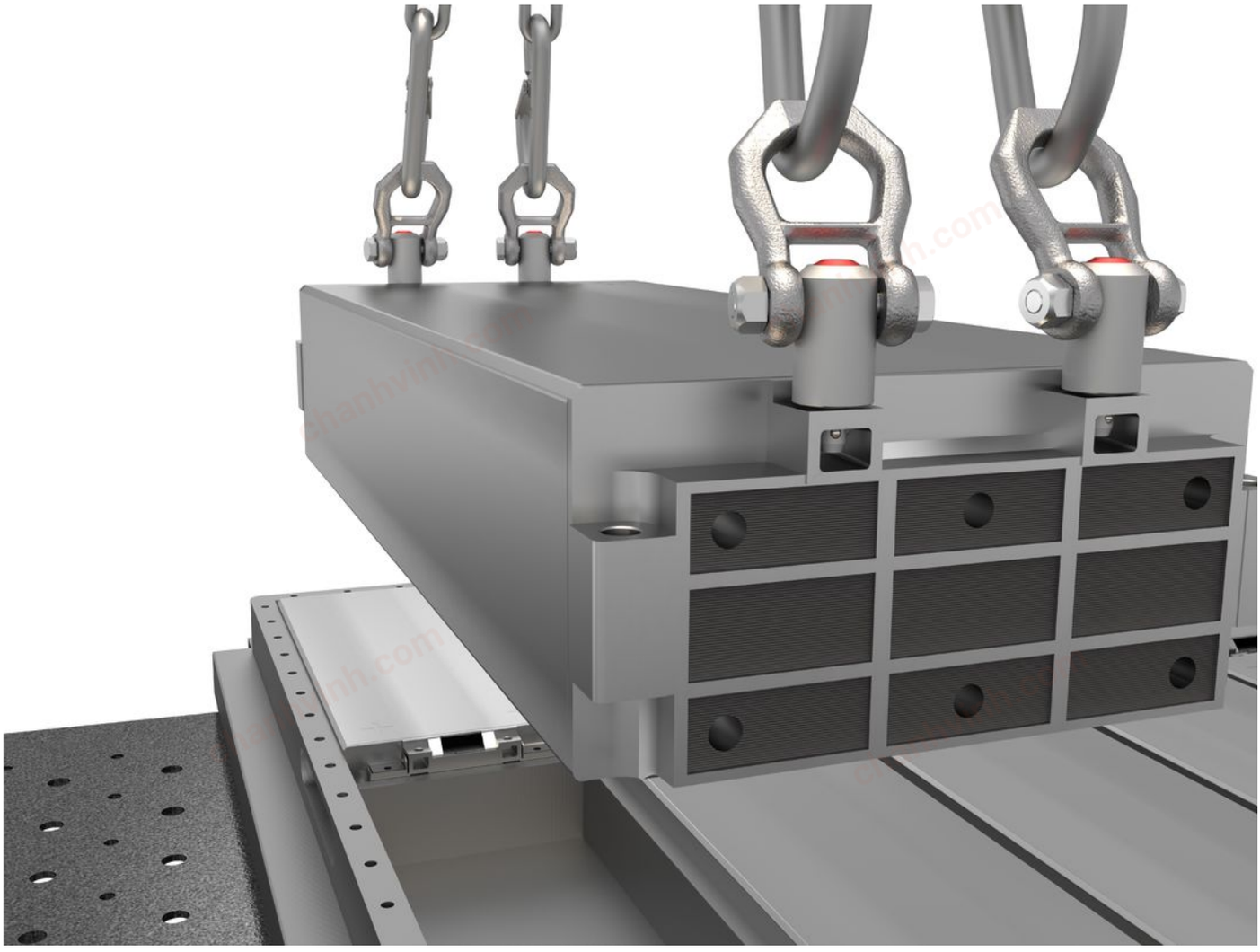

chanhvinh.com



chanhvinh.com

chanhvinh.com

Information on the load capacities

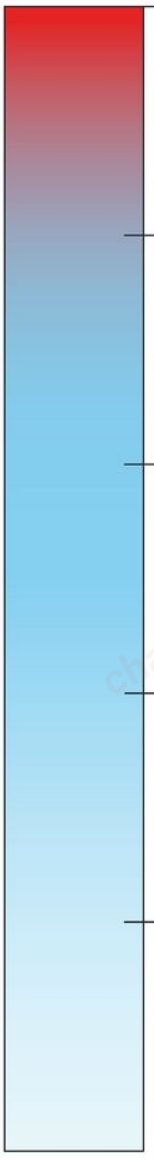

5 x load*

Break load test
Not included in DIN EN 13155
Not tested by TÜV Süd
Lifting device is destroyed
Load is no longer held

3 x load

Test according to DIN EN 13155
Tested by TÜV Süd
Lifting device is allowed to be deformed
Load is held

2 x load

Test according to DIN EN 13155
Tested by TÜV Süd
Lifting device must not be deformed

1 x load

Maximum permissible and specified load
Greater loads are not allowed during use!

*For lifting pins, the specification 5 x load only applies to x min.

chanhvinh.com

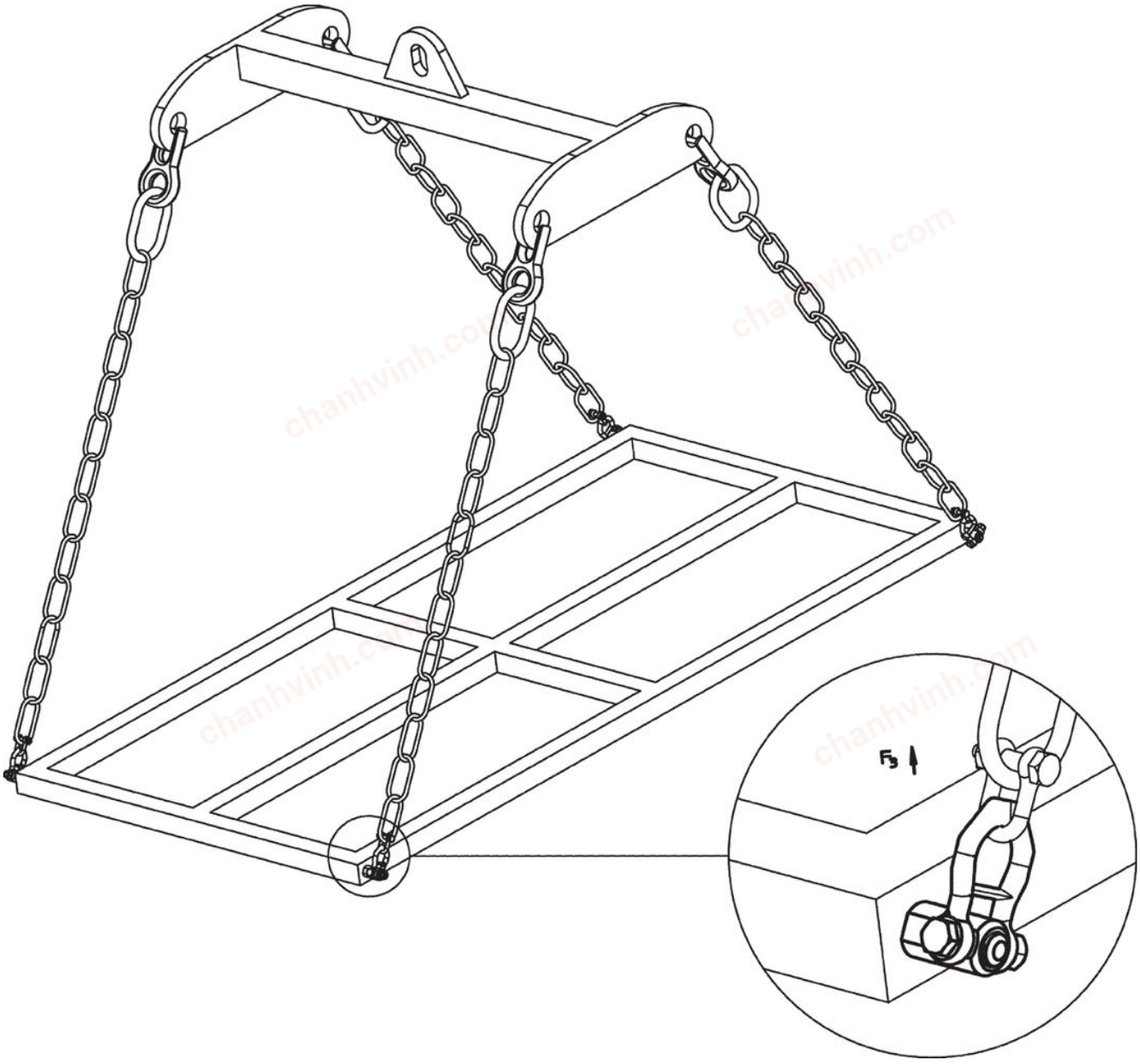

chanhvinh.com

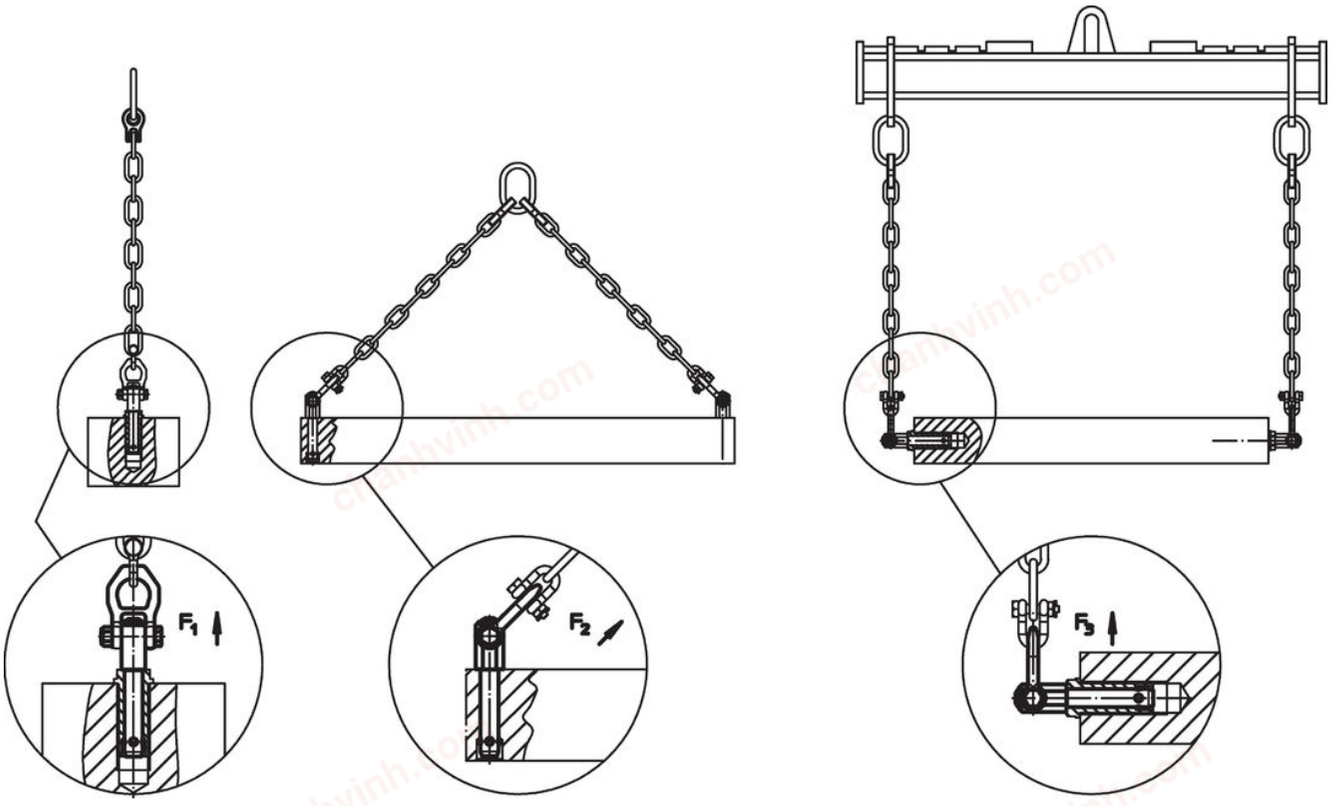

Compliance

For detailed compliance information please select the desired article number.