chanhvinh.com

Lifting Pins • self-locking
EH 22350.



Product Description

Heavy-duty lifting element for quick and easy use, with moveable shackle and locking stud to provide protection against unintentional unlocking. Special lifting devices, e.g. threads for ring bolts, are no longer required on the workpiece.
All versions are corrosion-resistant.

Material

Pin part
- Heat-treated steel, tempered, manganese phosphated

Press button
- Aluminium, red anodised

Shackle
- Heat-treated steel, tempered, manganese phosphated

Spring
- Stainless Steel

Assembly

For use, H11 boreholes are sufficient.

Mounting:
1. Press in the button and hold it down
2. Insert the lifting pin
3. Release the button (The button must be back in its original position)

Dismantling:
1. Press in the button and hold it down.
2. Remove the lifting pin.
3. Release the button.

Operation

Each lifting pin contains an instruction manual with an EC Declaration of Conformity.

More information

Accessories

As accessories, we offer matching locating bushings for d_1 = 8, 10, 12, 16 and 20

Further products

- Lifting Pins, self-locking, pneumatically operated
- Lifting Pins, self-locking, pneumatically operated, stainless steel
- Lifting Pins, self-locking, stainless steel
- Locating Bushings, for lifting pins
- Locating Bushings, plain, for lifting pins
- Locating Bushings with Seal, plain, for lifting pins
- Lifting Pins, self-locking, with handle
- Threaded Lifting Pins, self-locking
- Threaded Lifting Pins, self-locking, for centre holes according to DIN 332
- Threaded Lifting Pins, self-locking, with rotatable shackle
- Threaded Lifting Pins, self-locking - INCH
- Threaded Lifting Pins, self-locking, with rotatable shackle - INCH
- Threaded Lifting Pins, self-locking, with handle

chanhvinh.com

Drawing

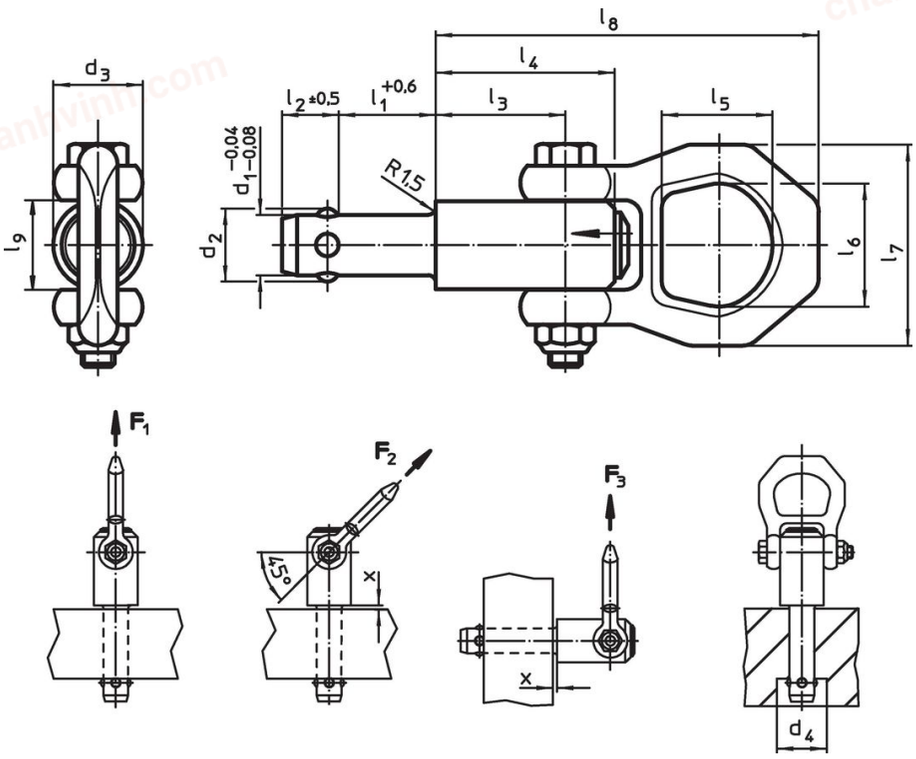

Order information

Dimensions													Load capacity according to DIN EN 13155			x		Location hole H11	max.		Art. No.
d_1 -0.04 -0.08	l_1 +0.6	d_2	d_3	d_4 min.	l_2 ±0.5	l_3	l_4	l_5	l_6	l_7	l_8	l_9	F_1	F_2	F_3	min.	max.				
[mm]													[kN]			[mm]		[mm]	[°C]	[g]	
8.0	**10**	9.35	21.5	9.85	8.75	25.7	36.0	27.0	30	49	87.5	21.5	1.5	1.2	0.5	1.5	5	8.0	250	266	22350.0601
8.0	**15**	9.35	21.5	9.85	8.75	25.7	36.0	27.0	30	49	87.5	21.5	1.5	1.2	0.5	1.5	10	8.0	250	268	22350.0602
8.0	**25**	9.35	21.5	9.85	8.75	25.7	36.0	27.0	30	49	87.5	21.5	1.5	1.2	0.5	1.5	15	8.0	250	273	22350.0604
8.0	**35**	9.35	21.5	9.85	8.75	25.7	36.0	27.0	30	49	87.5	21.5	1.5	1.2	0.5	1.5	15	8.0	250	274	22350.0606
8.0	**50**	9.35	21.5	9.85	8.75	25.7	36.0	27.0	30	49	87.5	21.5	1.5	1.2	0.5	1.5	15	8.0	250	281	22350.0608
8.3	**10**	9.65	21.5	10.05	8.75	25.7	36.0	27.0	30	49	87.5	21.5	1.5	1.2	0.5	1.5	5	8.3	250	266	22350.0611
8.3	**15**	9.65	21.5	10.05	8.75	25.7	36.0	27.0	30	49	87.5	21.5	1.5	1.2	0.5	1.5	10	8.3	250	272	22350.0612
8.3	**25**	9.65	21.5	10.05	8.75	25.7	36.0	27.0	30	49	87.5	21.5	1.5	1.2	0.5	1.5	15	8.3	250	274	22350.0614
8.3	**35**	9.65	21.5	10.05	8.75	25.7	36.0	27.0	30	49	87.5	21.5	1.5	1.2	0.5	1.5	15	8.3	250	274	22350.0616
10.0	**10**	11.70	21.5	12.20	10.20	25.7	36.0	27.0	30	49	87.5	21.5	2.7	2.4	2.1	1.5	10	10.0	250	275	22350.0620
10.0	**15**	11.70	21.5	12.20	10.20	25.7	36.0	27.0	30	49	87.5	21.5	2.7	2.4	2.1	1.5	10	10.0	250	271	22350.0621
10.0	**25**	11.70	21.5	12.20	10.20	25.7	36.0	27.0	30	49	87.5	21.5	2.7	2.4	2.1	1.5	10	10.0	250	274	22350.0623
10.0	**35**	11.70	21.5	12.20	10.20	25.7	36.0	27.0	30	49	87.5	21.5	2.7	2.4	2.1	1.5	10	10.0	250	300	22350.0625
10.0	**50**	11.70	21.5	12.20	10.20	25.7	36.0	27.0	30	49	87.5	21.5	2.7	2.4	2.1	1.5	10	10.0	250	292	22350.0627
10.0	**75**	11.70	21.5	12.20	10.20	25.7	36.0	27.0	30	49	87.5	21.5	2.7	2.4	2.1	1.5	10	10.0	250	339	22350.0629
12.0	**10**	14.20	21.5	14.70	11.00	25.7	36.0	27.0	30	49	87.5	21.5	3.5	3.2	2.8	1.5	10	12.0	250	279	22350.0630
12.0	**15**	14.20	21.5	14.70	11.00	25.7	36.0	27.0	30	49	87.5	21.5	3.5	3.2	2.8	1.5	10	12.0	250	280	22350.0631
12.0	**25**	14.20	21.5	14.70	11.00	25.7	36.0	27.0	30	49	87.5	21.5	3.5	3.2	2.8	1.5	15	12.0	250	288	22350.0633
12.0	**35**	14.20	21.5	14.70	11.00	25.7	36.0	27.0	30	49	87.5	21.5	3.5	3.2	2.8	1.5	15	12.0	250	298	22350.0635
12.0	**50**	14.20	21.5	14.70	11.00	25.7	36.0	27.0	30	49	87.5	21.5	3.5	3.2	2.8	1.5	15	12.0	250	301	22350.0637
12.0	**75**	14.20	21.5	14.70	11.00	25.7	36.0	27.0	30	49	87.5	21.5	3.5	3.2	2.8	1.5	15	12.0	250	360	22350.0639
13.8	**25**	16.20	21.5	16.70	13.00	25.7	36.0	27.0	30	49	87.5	21.5	3.8	3.5	2.8	1.5	15	13.8	250	299	22350.0651
13.8	**50**	16.20	21.5	16.70	13.00	25.7	36.0	27.0	30	49	87.5	21.5	3.8	3.5	2.8	1.5	35	13.8	250	276	22350.0653
13.8	**75**	16.20	21.5	16.70	13.00	25.7	36.0	27.0	30	49	87.5	21.5	3.8	3.5	2.8	1.5	35	13.8	250	409	22350.0655
16.0	**15**	18.60	25.0	19.20	15.10	31.0	44.5	27.0	30	49	92.8	21.5	4.8	4.5	4.1	1.5	15	16.0	250	342	22350.0640
16.0	**25**	18.60	25.0	19.20	15.10	31.0	44.5	27.0	30	49	92.8	21.5	4.8	4.5	4.1	1.5	15	16.0	250	391	22350.0641
16.0	**35**	18.60	25.0	19.20	15.10	31.0	44.5	27.0	30	49	92.8	21.5	4.8	4.5	4.1	1.5	15	16.0	250	410	22350.0642
16.0	**50**	18.60	25.0	19.20	15.10	31.0	44.5	27.0	30	49	92.8	21.5	4.8	4.5	4.1	1.5	35	16.0	250	318	22350.0643

chanhvinh.com

Dimensions													Load capacity according to DIN EN 13155			x		Location hole H11	max.		Art. No.
d_1 -0.04 -0.08	l_1 +0.6	d_2	d_3	d_4 min.	l_2 ±0.5	l_3	l_4	l_5	l_6	l_7	l_8	l_9	F_1	F_2	F_3	min.	max.				
[mm]													[kN]			[mm]		[mm]	[°C]	[g]	
16.0	**75**	18.60	25.0	19.20	15.10	31.0	44.5	27.0	30	49	92.8	21.5	4.8	4.5	4.1	1.5	40	16.0	250	462	22350.0645
18.0	**25**	21.50	30.0	22.20	17.30	36.5	52.0	32.6	30	56	114.0	26.0	10.0	8.0	5.0	1.5	15	18.0	250	632	22350.0663
18.0	**35**	21.50	30.0	22.20	17.30	36.5	52.0	32.6	30	56	114.0	26.0	10.0	8.0	5.0	1.5	25	18.0	250	677	22350.0665
18.0	**50**	21.50	30.0	22.20	17.30	36.5	52.0	32.6	30	56	114.0	26.0	10.0	8.0	5.0	1.5	35	18.0	250	674	22350.0667
18.0	**75**	21.50	30.0	22.20	17.30	36.5	52.0	32.6	30	56	114.0	26.0	10.0	8.0	5.0	1.5	40	18.0	250	715	22350.0669
20.0	**25**	24.50	30.0	25.20	19.70	36.5	52.0	32.6	36	56	114.0	26.0	10.0	8.5	6.5	1.5	25	20.0	250	640	22350.0671
20.0	**35**	24.50	30.0	25.20	19.70	36.5	52.0	32.6	36	56	114.0	26.0	10.0	8.5	6.5	1.5	25	20.0	250	681	22350.0672
20.0	**50**	24.50	30.0	25.20	19.70	36.5	52.0	32.6	36	56	114.0	26.0	10.0	8.5	6.5	1.5	25	20.0	250	706	22350.0673
20.0	**75**	24.50	30.0	25.20	19.70	36.5	52.0	32.6	36	56	114.0	26.0	10.0	8.5	6.5	1.5	30	20.0	250	766	22350.0675

Application example





chanhvinh.com

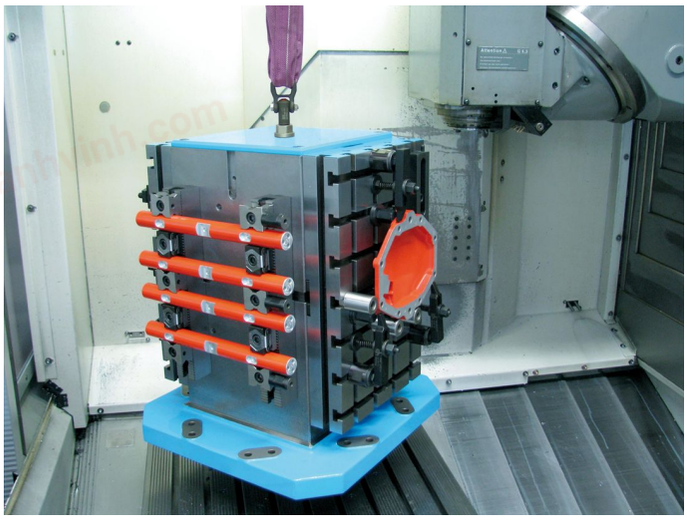

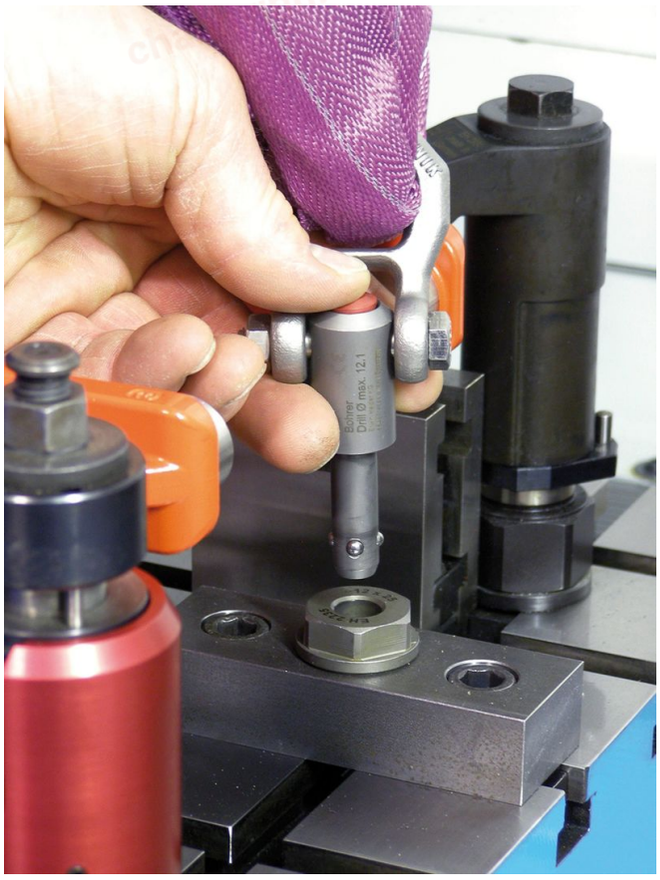



chanhvinh.com



chanhvinh.com



chanhvinh.com

Information on the load capacities

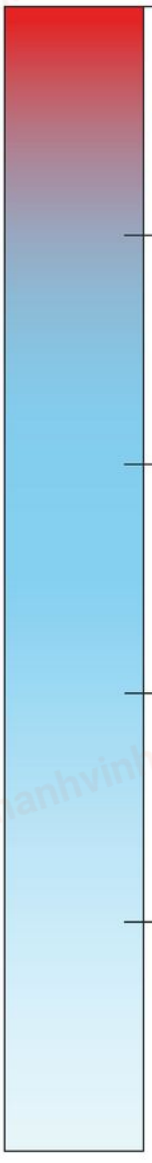

5 x load*

Break load test
Not included in DIN EN 13155
Not tested by TÜV Süd
Lifting device is destroyed
Load is no longer held

3 x load

Test according to DIN EN 13155
Tested by TÜV Süd
Lifting device is allowed to be deformed
Load is held

2 x load

Test according to DIN EN 13155
Tested by TÜV Süd
Lifting device must not be deformed

1 x load

Maximum permissible and specified load
Greater loads are not allowed during use!

*For lifting pins, the specification 5 x load only applies to x min.

chanhvinh.com

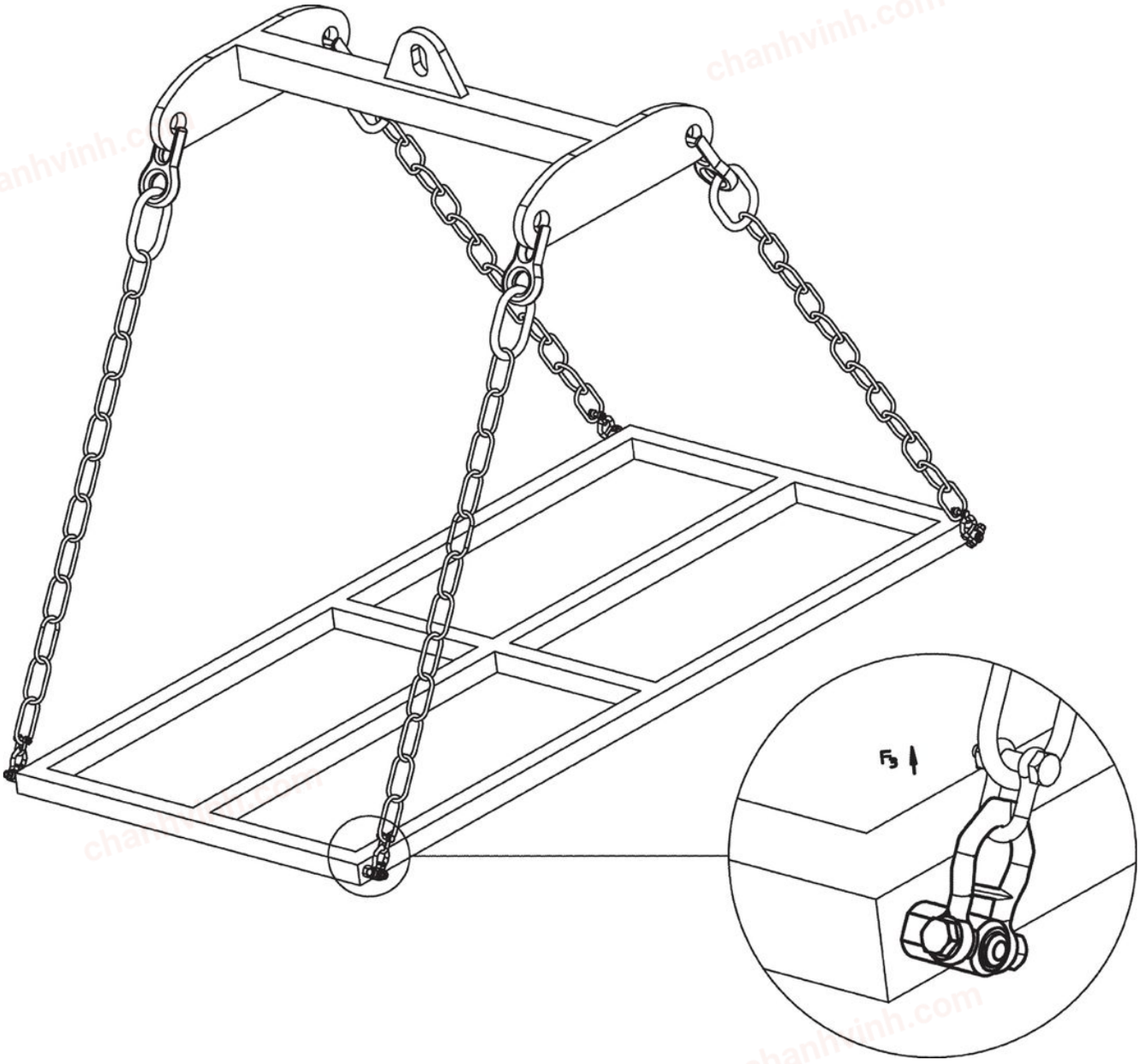

chanhvinh.com

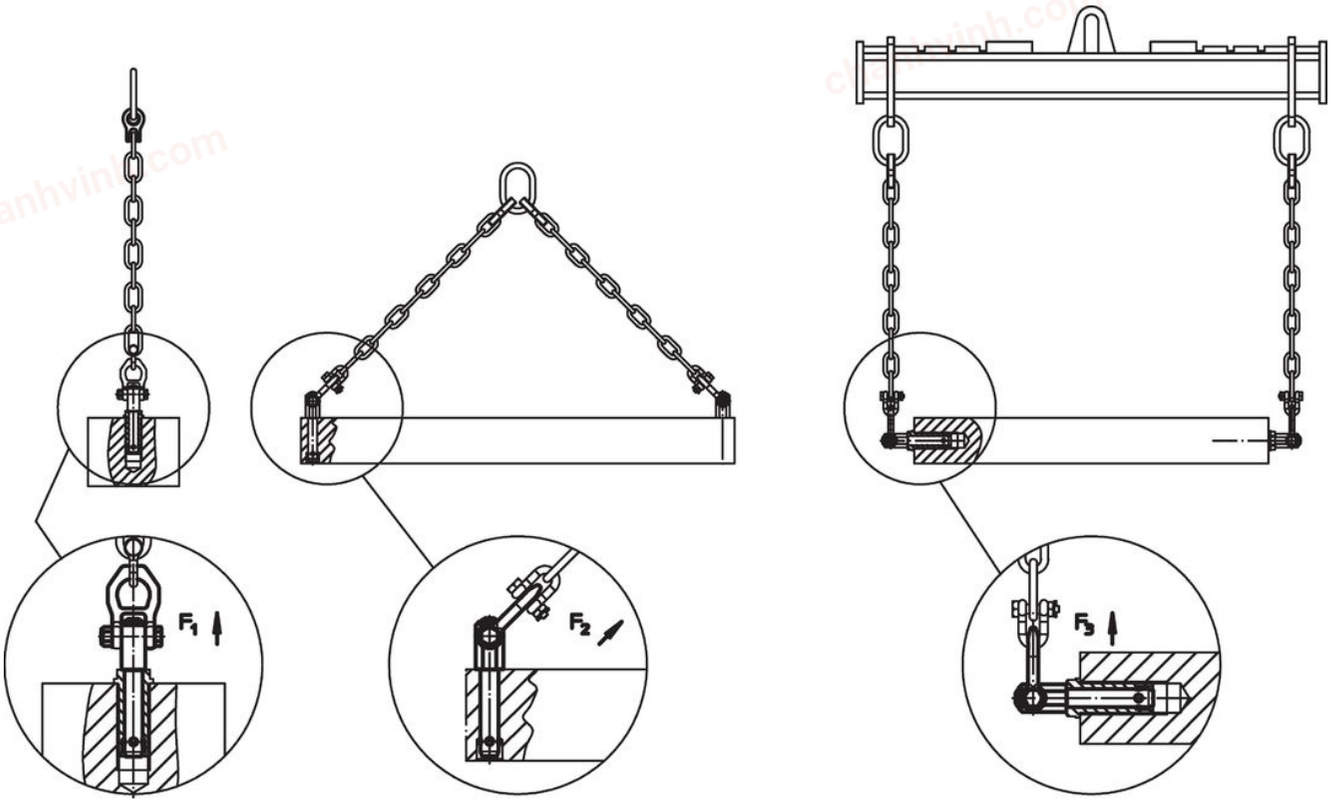

Compliance

For detailed compliance information please select the desired article number.