chanhvinh.com

Lifting Pins • self-locking, pneumatically operated, stainless steel
EH 22349.



Product Description

Quick, easy to use, and robust lifting element with pneumatic actuation. The integrated safety feature prevents release in the event of pressure loss. A form-fitting connection keeps the element securely latched when the load is picked up, providing for maximum safety.
This lifting pin is used for lifting loads in the automation and handling technology sector. Equipped with an interface as per ISO 9409-1 (Industrial robots – Mechanical interfaces), the component can be integrated into robotic systems. The pneumatic release can be monitored by means of a position indicator. Boasting a low weight thanks to its aluminium housing, the component is capable of delivering maximum loading capacity - especially during robot applications.
The advantages at a glance:

- Suitable for semi-automatic and fully automatic applications
- Integrated safety feature - no release in the event of pressure loss
- Latching during load pick-up thanks to form-fitting connection
- Option to monitor the pneumatic release
- Low weight - delivers maximum loading capacity for robot applications
- Connection to ISO 9409-1 interfaces (Industrial robots - Mechanical interfac

Material

Pin part
- Stainless steel 1.4542, precipitation-hardened

Body
- Aluminium, blue anodised

Spring
- Stainless Steel

Control module
- Aluminium Al

Screw
- Steel, zinc-plated, quality 10.9

Assembly

For assembly, four cylinder screws (M5 x 70) have been included in the scope of delivery.

Operation

Each lifting pin contains an operating manual. This document is also available for download as PDF.

More information

Notes

Customized design on request.
The modular design of the component allows customers to realize other sizes with lifting pins included in our product range.

Further products

- Lifting Pins, self-locking, pneumatically operated
- Lifting Pins, self-locking
- Lifting Pins, self-locking, stainless steel
- Lifting Pins, self-locking, with handle
- Threaded Lifting Pins, self-locking
- Threaded Lifting Pins, self-locking, for centre holes according to DIN 332
- Threaded Lifting Pins, self-locking, with rotatable shackle
- Threaded Lifting Pins, self-locking - INCH
- Threaded Lifting Pins, self-locking, with rotatable shackle - INCH
- Threaded Lifting Pins, self-locking, with handle

chanhvinh.com

Drawing

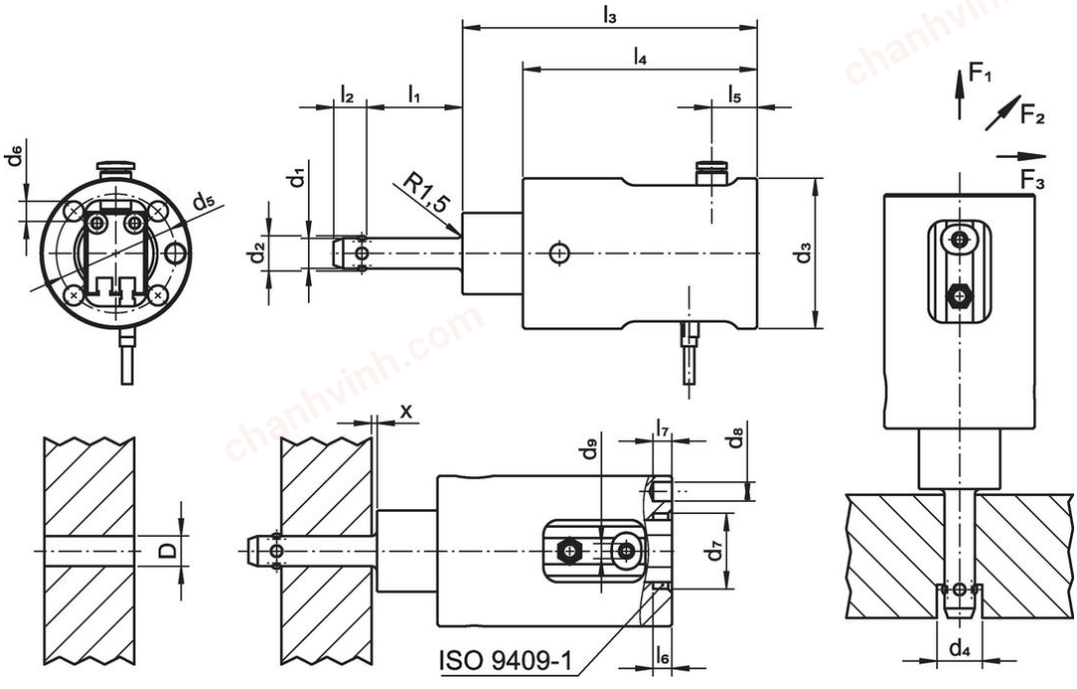

Order information

Dimensions																Load capacity			x		Location hole D H11	max.		Art. No.
d_1 -0.04 -0.08	l_1 +0.6	d_2	d_3	d_4 min.	d_5	d_6	d_7	d_8	d_9	l_2 ±0.5	l_3	l_4	l_5	l_6	l_7	F_1	F_2	F_3	min.	max.				
[mm]																[kN]			[mm]		[mm]	[°C]	[g]	
8.0	**10**	9.35	39.8	9.85	31.5	5.3	20	5	4	8.75	78	62	12	5	5	1.5	0.5	0.5	1.5	5	8.0	60	336	22349.0701
8.0	**15**	9.35	39.8	9.85	31.5	5.3	20	5	4	8.75	78	62	12	5	5	1.5	0.5	0.5	1.5	10	8.0	60	279	22349.0702
8.0	**25**	9.35	39.8	9.85	31.5	5.3	20	5	4	8.75	78	62	12	5	5	1.5	0.5	0.5	1.5	15	8.0	60	283	22349.0704
8.0	**35**	9.35	39.8	9.85	31.5	5.3	20	5	4	8.75	78	62	12	5	5	1.5	0.5	0.5	1.5	15	8.0	60	285	22349.0706
8.0	**50**	9.35	39.8	9.85	31.5	5.3	20	5	4	8.75	78	62	12	5	5	1.5	0.5	0.5	1.5	15	8.0	60	292	22349.0708
8.3	**10**	9.85	39.8	10.05	31.5	5.3	20	5	4	8.75	78	62	12	5	5	1.5	0.5	0.5	1.5	5	8.3	60	278	22349.0711
8.3	**15**	9.85	39.8	10.05	31.5	5.3	20	5	4	8.75	78	62	12	5	5	1.5	0.5	0.5	1.5	10	8.3	60	280	22349.0712
8.3	**25**	9.85	39.8	10.05	31.5	5.3	20	5	4	8.75	78	62	12	5	5	1.5	0.5	0.5	1.5	15	8.3	60	284	22349.0714
8.3	**35**	9.85	39.8	10.05	31.5	5.3	20	5	4	8.75	78	62	12	5	5	1.5	0.5	0.5	1.5	15	8.3	60	288	22349.0716
10.0	**10**	11.70	39.8	12.20	31.5	5.3	20	5	4	10.20	78	62	12	5	5	2.7	0.5	0.5	1.5	10	10.0	60	281	22349.0720
10.0	**15**	11.70	39.8	12.20	31.5	5.3	20	5	4	10.20	78	62	12	5	5	2.7	0.5	0.5	1.5	10	10.0	60	285	22349.0721
10.0	**25**	11.70	39.8	12.20	31.5	5.3	20	5	4	10.20	78	62	12	5	5	2.7	0.5	0.5	1.5	10	10.0	60	291	22349.0723
10.0	**35**	11.70	39.8	12.20	31.5	5.3	20	5	4	10.20	78	62	12	5	5	2.7	0.5	0.5	1.5	10	10.0	60	296	22349.0725
10.0	**50**	11.70	39.8	12.20	31.5	5.3	20	5	4	10.20	78	62	12	5	5	2.7	0.5	0.5	1.5	10	10.0	60	305	22349.0727
10.0	**75**	11.70	39.8	12.20	31.5	5.3	20	5	4	10.20	78	62	12	5	5	2.7	0.5	0.5	1.5	10	10.0	60	320	22349.0729
12.0	**10**	14.20	39.8	14.70	31.5	5.3	20	5	4	11.00	78	62	12	5	5	3.5	0.5	0.5	1.5	15	12.0	60	289	22349.0730
12.0	**15**	14.20	39.8	14.70	31.5	5.3	20	5	4	11.00	78	62	12	5	5	3.5	0.5	0.5	1.5	15	12.0	60	293	22349.0731
12.0	**25**	14.20	39.8	14.70	31.5	5.3	20	5	4	11.00	78	62	12	5	5	3.5	0.5	0.5	1.5	15	12.0	60	301	22349.0733
12.0	**35**	14.20	39.8	14.70	31.5	5.3	20	5	4	11.00	78	62	12	5	5	3.5	0.5	0.5	1.5	15	12.0	60	310	22349.0735
12.0	**50**	14.20	39.8	14.70	31.5	5.3	20	5	4	11.00	78	62	12	5	5	3.5	0.5	0.5	1.5	15	12.0	60	323	22349.0737
12.0	**75**	14.20	39.8	14.70	31.5	5.3	20	5	4	11.00	78	62	12	5	5	3.5	0.5	0.5	1.5	15	12.0	60	435	22349.0739
13.8	**25**	16.20	39.8	16.70	31.5	5.3	20	5	4	13.00	78	62	12	5	5	3.8	0.5	0.5	1.5	15	13.8	60	313	22349.0751
13.8	**50**	16.20	39.8	16.70	31.5	5.3	20	5	4	13.00	78	62	12	5	5	3.8	0.5	0.5	1.5	35	13.8	60	342	22349.0753
13.8	**75**	16.20	39.8	16.70	31.5	5.3	20	5	4	13.00	78	62	12	5	5	3.8	0.5	0.5	1.5	35	13.8	60	370	22349.0755

chanhvinh.com

Application example

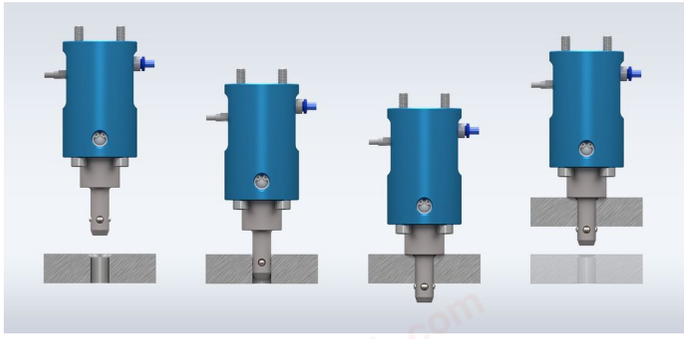

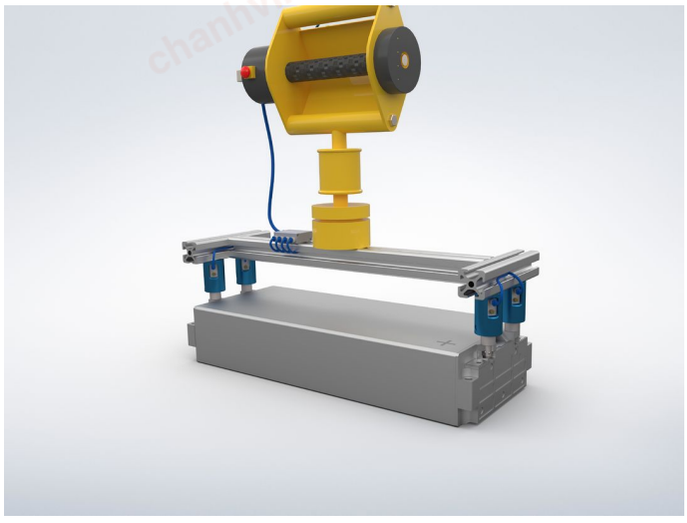



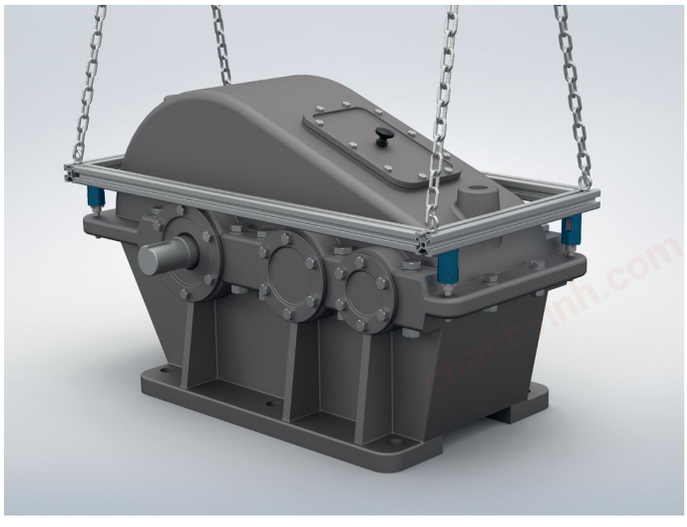



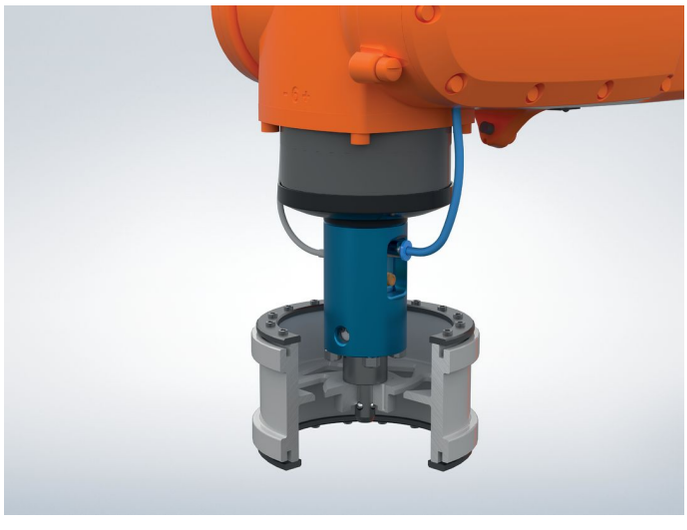

Compliance

For detailed compliance information please select the desired article number.