chanhvinh.com

Ball Lock Pins • self-locking, with button handle

EH 22340. /EH 22350.



Product Description

For quick fastening, locking, adjusting, changing and securing. Quickly and easily unlockable for frequently repeated connections.
All versions are corrosion resistant. When using stainless steel 1.4542: high-strength, hardened, abrasion resistant pin with high load capacity.
Compact design with button handle.

Material

Pin part
- Stainless steel 1.4305
- Stainless steel 1.4542, precipitation-hardened

Handle
- Aluminium, black similar to RAL 9005

Press button
- Stainless steel, black

Spring
- Stainless steel

Operation

The balls are unlocked by pressing the button.

Characteristic

Types from stainless steel 1.4542 with marking below the balls.

More information

Notes

Customized design on request.

Accessories

Can easily be fitted with retaining cable EH 22400.

Further products

- Locating Bushings, for ball lock pins and socket pins
- Locating Bushings, with flange, for ball lock pins and socket pins
- Retaining Cables
- Positioning Bushings, with collar, DIN 172 A
- Positioning Bushings, without collar, DIN 179 A
- Ball Lock Pins with Button Handle, single acting - comply with NAS / MS17984

Drawing

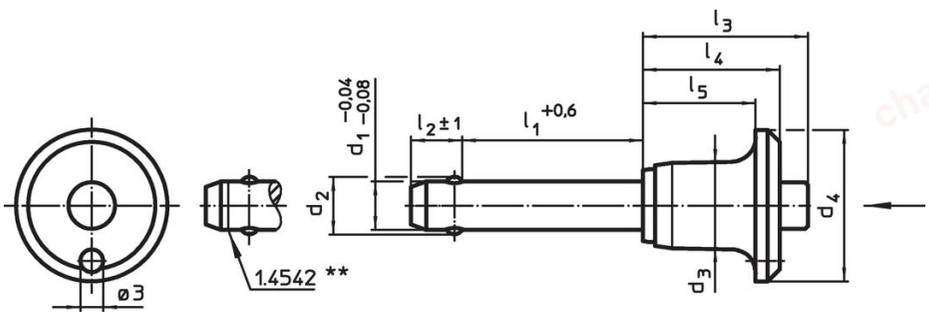

** Types from stainless steel 1.4542 with marking.

Order information

Dimensions									Location hole H11				Shearing resistance, two-shear[1] min.	Art. No.
d_1 -0.04 -0.08	l_1 +0.6	d_2	d_3	d_4	l_2 ±1	l_3	l_4	l_5		min.	max.			
[mm]									[mm]	[°C]		[g]	[kN]	
Stainless steel 1.4305														
5	**10**	5.5	11.3	20	6.0	20.7	17.6	14.6	5	-30	150	12	14	22340.0212
5	**15**	5.5	11.3	20	6.0	20.7	17.6	14.6	5	-30	150	12	14	22340.0213
5	**20**	5.5	11.3	20	6.0	20.7	17.6	14.6	5	-30	150	13	14	22340.0214
5	**25**	5.5	11.3	20	6.0	20.7	17.6	14.6	5	-30	150	14	14	22340.0215
5	**30**	5.5	11.3	20	6.0	20.7	17.6	14.6	5	-30	150	15	14	22340.0216
5	**35**	5.5	11.3	20	6.0	20.7	17.6	14.6	5	-30	150	15	14	22340.0217

[1] Shearing resistance similar to DIN 50141

chanhvinh.com

Dimensions									Location hole H11				Shearing resistance, two-shear[1] min.	Art. No.
d_1 -0.04 -0.08	l_1 +0.6	d_2	d_3	d_4	l_2 ±1	l_3	l_4	l_5		min.	max.			
[mm]									[mm]	[°C]		[g]	[kN]	
5	40	5.5	11.3	20	6.0	20.7	17.6	14.6	5	-30	150	16	14	22340.0218
5	45	5.5	11.3	20	6.0	20.7	17.6	14.6	5	-30	150	17	14	22340.0311
5	50	5.5	11.3	20	6.0	20.7	17.6	14.6	5	-30	150	17	14	22340.0312
5	60	5.5	11.3	20	6.0	20.7	17.6	14.6	5	-30	150	19	14	22340.0209
5	70	5.5	11.3	20	6.0	20.7	17.6	14.6	5	-30	150	20	14	22340.0210
5	80	5.5	11.3	20	6.0	20.7	17.6	14.6	5	-30	150	22	14	22340.0211
6	10	7.0	11.3	20	7.0	20.7	17.6	14.6	6	-30	150	13	21	22340.0222
6	15	7.0	11.3	20	7.0	20.7	17.6	14.6	6	-30	150	14	21	22340.0223
6	20	7.0	11.3	20	7.0	20.7	17.6	14.6	6	-30	150	15	21	22340.0224
6	25	7.0	11.3	20	7.0	20.7	17.6	14.6	6	-30	150	16	21	22340.0225
6	30	7.0	11.3	20	7.0	20.7	17.6	14.6	6	-30	150	17	21	22340.0226
6	35	7.0	11.3	20	7.0	20.7	17.6	14.6	6	-30	150	18	21	22340.0227
6	40	7.0	11.3	20	7.0	20.7	17.6	14.6	6	-30	150	19	21	22340.0228
6	45	7.0	11.3	20	7.0	20.7	17.6	14.6	6	-30	150	20	21	22340.0229
6	50	7.0	11.3	20	7.0	20.7	17.6	14.6	6	-30	150	21	21	22340.0230
6	60	7.0	11.3	20	7.0	20.7	17.6	14.6	6	-30	150	23	21	22340.0219
6	70	7.0	11.3	20	7.0	20.7	17.6	14.6	6	-30	150	25	21	22340.0220
6	80	7.0	11.3	20	7.0	20.7	17.6	14.6	6	-30	150	27	21	22340.0221
8	10	9.5	14.1	25	8.2	27.3	22.6	18.6	8	-30	150	25	38	22340.0232
8	15	9.5	14.1	25	8.2	27.3	22.6	18.6	8	-30	150	27	38	22340.0233
8	20	9.5	14.1	25	8.2	27.3	22.6	18.6	8	-30	150	29	38	22340.0234
8	25	9.5	14.1	25	8.2	27.3	22.6	18.6	8	-30	150	31	38	22340.0235
8	30	9.5	14.1	25	8.2	27.3	22.6	18.6	8	-30	150	33	38	22340.0236
8	35	9.5	14.1	25	8.2	27.3	22.6	18.6	8	-30	150	34	38	22340.0237
8	40	9.5	14.1	25	8.2	27.3	22.6	18.6	8	-30	150	36	38	22340.0238
8	45	9.5	14.1	25	8.2	27.3	22.6	18.6	8	-30	150	38	38	22340.0239
8	50	9.5	14.1	25	8.2	27.3	22.6	18.6	8	-30	150	40	38	22340.0240
8	60	9.5	14.1	25	8.2	27.3	22.6	18.6	8	-30	150	44	38	22340.0231
8	70	9.5	14.1	25	8.2	27.3	22.6	18.6	8	-30	150	47	38	22340.0241
8	80	9.5	14.1	25	8.2	27.3	22.6	18.6	8	-30	150	51	38	22340.0242
8	90	9.5	14.1	25	8.2	27.3	22.6	18.6	8	-30	150	55	38	22340.0243
8	100	9.5	14.1	25	8.2	27.3	22.6	18.6	8	-30	150	58	38	22340.0251
10	15	12.0	14.1	25	9.6	27.3	22.6	18.6	10	-30	150	33	60	22340.0259
10	20	12.0	14.1	25	9.6	27.3	22.6	18.6	10	-30	150	36	60	22340.0244
10	25	12.0	14.1	25	9.6	27.3	22.6	18.6	10	-30	150	39	60	22340.0245
10	30	12.0	14.1	25	9.6	27.3	22.6	18.6	10	-30	150	42	60	22340.0246
10	35	12.0	14.1	25	9.6	27.3	22.6	18.6	10	-30	150	44	60	22340.0247
10	40	12.0	14.1	25	9.6	27.3	22.6	18.6	10	-30	150	47	60	22340.0248
10	45	12.0	14.1	25	9.6	27.3	22.6	18.6	10	-30	150	50	60	22340.0249
10	50	12.0	14.1	25	9.6	27.3	22.6	18.6	10	-30	150	53	60	22340.0250
10	60	12.0	14.1	25	9.6	27.3	22.6	18.6	10	-30	150	59	60	22340.0252
10	70	12.0	14.1	25	9.6	27.3	22.6	18.6	10	-30	150	65	60	22340.0253
10	80	12.0	14.1	25	9.6	27.3	22.6	18.6	10	-30	150	71	60	22340.0254
10	90	12.0	14.1	25	9.6	27.3	22.6	18.6	10	-30	150	77	60	22340.0255
10	100	12.0	14.1	25	9.6	27.3	22.6	18.6	10	-30	150	83	60	22340.0256
10	110	12.0	14.1	25	9.6	27.3	22.6	18.6	10	-30	150	88	60	22340.0257
10	120	12.0	14.1	25	9.6	27.3	22.6	18.6	10	-30	150	94	60	22340.0258
12	20	14.5	17.7	35	10.6	33.2	27.3	22.3	12	-30	150	66	87	22340.0264
12	25	14.5	17.7	35	10.6	33.2	27.3	22.3	12	-30	150	71	87	22340.0265
12	30	14.5	17.7	35	10.6	33.2	27.3	22.3	12	-30	150	75	87	22340.0266
12	35	14.5	17.7	35	10.6	33.2	27.3	22.3	12	-30	150	79	87	22340.0267
12	40	14.5	17.7	35	10.6	33.2	27.3	22.3	12	-30	150	83	87	22340.0268
12	45	14.5	17.7	35	10.6	33.2	27.3	22.3	12	-30	150	87	87	22340.0269
12	50	14.5	17.7	35	10.6	33.2	27.3	22.3	12	-30	150	92	87	22340.0270
12	60	14.5	17.7	35	10.6	33.2	27.3	22.3	12	-30	150	100	87	22340.0272
12	70	14.5	17.7	35	10.6	33.2	27.3	22.3	12	-30	150	109	87	22340.0274
12	80	14.5	17.7	35	10.6	33.2	27.3	22.3	12	-30	150	117	87	22340.0276
12	90	14.5	17.7	35	10.6	33.2	27.3	22.3	12	-30	150	126	87	22340.0260
12	100	14.5	17.7	35	10.6	33.2	27.3	22.3	12	-30	150	134	87	22340.0261

[1] Shearing resistance similar to DIN 50141

chanhvinh.com

Dimensions									Location hole H11	min.	max.		Shearing resistance, two-shear[1] min.	Art. No.
d_1 -0.04 -0.08	l_1 +0.6	d_2	d_3	d_4	l_2 ±1	l_3	l_4	l_5						
[mm]									[mm]	[°C]		[g]	[kN]	
12	**110**	14.5	17.7	35	10.6	33.2	27.3	22.3	12	-30	150	143	87	22340.0262
12	**120**	14.5	17.7	35	10.6	33.2	27.3	22.3	12	-30	150	152	87	22340.0263
16	**30**	19.0	23.4	40	14.0	42.2	34.5	28.5	16	-30	150	152	155	22340.0271
16	**35**	19.0	23.4	40	14.0	42.2	34.5	28.5	16	-30	150	156	155	22340.0273
16	**40**	19.0	23.4	40	14.0	42.2	34.5	28.5	16	-30	150	167	155	22340.0275
16	**45**	19.0	23.4	40	14.0	42.2	34.5	28.5	16	-30	150	171	155	22340.0277
16	**50**	19.0	23.4	40	14.0	42.2	34.5	28.5	16	-30	150	184	155	22340.0278
16	**60**	19.0	23.4	40	14.0	42.2	34.5	28.5	16	-30	150	198	155	22340.0279
16	**70**	19.0	23.4	40	14.0	42.2	34.5	28.5	16	-30	150	214	155	22340.0280
16	**80**	19.0	23.4	40	14.0	42.2	34.5	28.5	16	-30	150	229	155	22340.0281
16	**90**	19.0	23.4	40	14.0	42.2	34.5	28.5	16	-30	150	245	155	22340.0282
16	**100**	19.0	23.4	40	14.0	42.2	34.5	28.5	16	-30	150	261	155	22340.0283
16	**110**	19.0	23.4	40	14.0	42.2	34.5	28.5	16	-30	150	276	155	22340.0284
16	**120**	19.0	23.4	40	14.0	42.2	34.5	28.5	16	-30	150	291	155	22340.0285
16	**130**	19.0	23.4	40	14.0	42.2	34.5	28.5	16	-30	150	307	155	22340.0286
16	**140**	19.0	23.4	40	14.0	42.2	34.5	28.5	16	-30	150	317	155	22340.0287
16	**150**	19.0	23.4	40	14.0	42.2	34.5	28.5	16	-30	150	338	155	22340.0288
20	**50**	24.8	23.4	40	17.0	43.1	34.5	28.5	20	-30	150	243	244	22340.0289
20	**60**	24.8	23.4	40	17.0	43.1	34.5	28.5	20	-30	150	267	244	22340.0290
20	**70**	24.8	23.4	40	17.0	43.1	34.5	28.5	20	-30	150	292	244	22340.0291
20	**80**	24.8	23.4	40	17.0	43.1	34.5	28.5	20	-30	150	316	244	22340.0292
20	**90**	24.8	23.4	40	17.0	43.1	34.5	28.5	20	-30	150	335	244	22340.0293
20	**100**	24.8	23.4	40	17.0	43.1	34.5	28.5	20	-30	150	365	244	22340.0294
20	**110**	24.8	23.4	40	17.0	43.1	34.5	28.5	20	-30	150	388	244	22340.0295
20	**120**	24.8	23.4	40	17.0	43.1	34.5	28.5	20	-30	150	412	244	22340.0296
20	**130**	24.8	23.4	40	17.0	43.1	34.5	28.5	20	-30	150	432	244	22340.0297
20	**140**	24.8	23.4	40	17.0	43.1	34.5	28.5	20	-30	150	455	244	22340.0298
20	**150**	24.8	23.4	40	17.0	43.1	34.5	28.5	20	-30	150	486	244	22340.0299
25	**50**	31.0	30.4	50	22.0	54.8	43.5	36.5	25	-30	150	441	386	22340.0300
25	**60**	31.0	30.4	50	22.0	54.8	43.5	36.5	25	-30	150	480	386	22340.0301
25	**70**	31.0	30.4	50	22.0	54.8	43.5	36.5	25	-30	150	517	386	22340.0302
25	**80**	31.0	30.4	50	22.0	54.8	43.5	36.5	25	-30	150	555	386	22340.0303
25	**90**	31.0	30.4	50	22.0	54.8	43.5	36.5	25	-30	150	585	386	22340.0304
25	**100**	31.0	30.4	50	22.0	54.8	43.5	36.5	25	-30	150	631	386	22340.0305
25	**110**	31.0	30.4	50	22.0	54.8	43.5	36.5	25	-30	150	669	386	22340.0306
25	**120**	31.0	30.4	50	22.0	54.8	43.5	36.5	25	-30	150	705	386	22340.0307
25	**130**	31.0	30.4	50	22.0	54.8	43.5	36.5	25	-30	150	742	386	22340.0308
25	**140**	31.0	30.4	50	22.0	54.8	43.5	36.5	25	-30	150	773	386	22340.0309
25	**150**	31.0	30.4	50	22.0	54.8	43.5	36.5	25	-30	150	822	386	22340.0310
Stainless steel 1.4542, precipitation-hardened														
5	**10**	5.5	11.3	20	6.0	20.7	17.6	14.6	5	-30	150	12	24	22350.0212
5	**15**	5.5	11.3	20	6.0	20.7	17.6	14.6	5	-30	150	12	24	22350.0213
5	**20**	5.5	11.3	20	6.0	20.7	17.6	14.6	5	-30	150	13	24	22350.0214
5	**25**	5.5	11.3	20	6.0	20.7	17.6	14.6	5	-30	150	14	24	22350.0215
5	**30**	5.5	11.3	20	6.0	20.7	17.6	14.6	5	-30	150	15	24	22350.0216
5	**35**	5.5	11.3	20	6.0	20.7	17.6	14.6	5	-30	150	15	24	22350.0217
5	**40**	5.5	11.3	20	6.0	20.7	17.6	14.6	5	-30	150	16	24	22350.0218
5	**45**	5.5	11.3	20	6.0	20.7	17.6	14.6	5	-30	150	17	24	22350.0311
5	**50**	5.5	11.3	20	6.0	20.7	17.6	14.6	5	-30	150	17	24	22350.0312
5	**60**	5.5	11.3	20	6.0	20.7	17.6	14.6	5	-30	150	19	24	22350.0209
5	**70**	5.5	11.3	20	6.0	20.7	17.6	14.6	5	-30	150	20	24	22350.0210
5	**80**	5.5	11.3	20	6.0	20.7	17.6	14.6	5	-30	150	22	24	22350.0211
6	**10**	7.0	11.3	20	7.0	20.7	17.6	14.6	6	-30	150	13	35	22350.0222
6	**15**	7.0	11.3	20	7.0	20.7	17.6	14.6	6	-30	150	14	35	22350.0223
6	**20**	7.0	11.3	20	7.0	20.7	17.6	14.6	6	-30	150	15	35	22350.0224
6	**25**	7.0	11.3	20	7.0	20.7	17.6	14.6	6	-30	150	16	35	22350.0225
6	**30**	7.0	11.3	20	7.0	20.7	17.6	14.6	6	-30	150	17	35	22350.0226
6	**35**	7.0	11.3	20	7.0	20.7	17.6	14.6	6	-30	150	18	35	22350.0227

[1] Shearing resistance similar to DIN 50141

chanhvinh.com

Dimensions									Location hole H11				Shearing resistance, two-shear[1] min.	Art. No.
d_1 -0.04 -0.08	l_1 +0.6	d_2	d_3	d_4	l_2 ±1	l_3	l_4	l_5		min.	max.			
[mm]									[mm]	[°C]		[g]	[kN]	
6	40	7.0	11.3	20	7.0	20.7	17.6	14.6	6	-30	150	19	35	22350.0228
6	45	7.0	11.3	20	7.0	20.7	17.6	14.6	6	-30	150	20	35	22350.0229
6	50	7.0	11.3	20	7.0	20.7	17.6	14.6	6	-30	150	21	35	22350.0230
6	60	7.0	11.3	20	7.0	20.7	17.6	14.6	6	-30	150	23	35	22350.0219
6	70	7.0	11.3	20	7.0	20.7	17.6	14.6	6	-30	150	25	35	22350.0220
6	80	7.0	11.3	20	7.0	20.7	17.6	14.6	6	-30	150	27	35	22350.0221
8	10	9.5	14.1	25	8.2	27.3	22.6	18.6	8	-30	150	25	63	22350.0232
8	15	9.5	14.1	25	8.2	27.3	22.6	18.6	8	-30	150	27	63	22350.0233
8	20	9.5	14.1	25	8.2	27.3	22.6	18.6	8	-30	150	29	63	22350.0234
8	25	9.5	14.1	25	8.2	27.3	22.6	18.6	8	-30	150	31	63	22350.0235
8	30	9.5	14.1	25	8.2	27.3	22.6	18.6	8	-30	150	32	63	22350.0236
8	35	9.5	14.1	25	8.2	27.3	22.6	18.6	8	-30	150	34	63	22350.0237
8	40	9.5	14.1	25	8.2	27.3	22.6	18.6	8	-30	150	36	63	22350.0238
8	45	9.5	14.1	25	8.2	27.3	22.6	18.6	8	-30	150	38	63	22350.0239
8	50	9.5	14.1	25	8.2	27.3	22.6	18.6	8	-30	150	40	63	22350.0240
8	60	9.5	14.1	25	8.2	27.3	22.6	18.6	8	-30	150	43	63	22350.0231
8	70	9.5	14.1	25	8.2	27.3	22.6	18.6	8	-30	150	47	63	22350.0241
8	80	9.5	14.1	25	8.2	27.3	22.6	18.6	8	-30	150	51	63	22350.0242
8	90	9.5	14.1	25	8.2	27.3	22.6	18.6	8	-30	150	54	63	22350.0243
8	100	9.5	14.1	25	8.2	27.3	22.6	18.6	8	-30	150	58	63	22350.0251
10	15	12.0	14.1	25	9.6	27.3	22.6	18.6	10	-30	150	33	100	22350.0259
10	20	12.0	14.1	25	9.6	27.3	22.6	18.6	10	-30	150	35	100	22350.0244
10	25	12.0	14.1	25	9.6	27.3	22.6	18.6	10	-30	150	38	100	22350.0245
10	30	12.0	14.1	25	9.6	27.3	22.6	18.6	10	-30	150	41	100	22350.0246
10	35	12.0	14.1	25	9.6	27.3	22.6	18.6	10	-30	150	44	100	22350.0247
10	40	12.0	14.1	25	9.6	27.3	22.6	18.6	10	-30	150	47	100	22350.0248
10	45	12.0	14.1	25	9.6	27.3	22.6	18.6	10	-30	150	50	100	22350.0249
10	50	12.0	14.1	25	9.6	27.3	22.6	18.6	10	-30	150	53	100	22350.0250
10	60	12.0	14.1	25	9.6	27.3	22.6	18.6	10	-30	150	59	100	22350.0252
10	70	12.0	14.1	25	9.6	27.3	22.6	18.6	10	-30	150	64	100	22350.0253
10	80	12.0	14.1	25	9.6	27.3	22.6	18.6	10	-30	150	70	100	22350.0254
10	90	12.0	14.1	25	9.6	27.3	22.6	18.6	10	-30	150	76	100	22350.0255
10	100	12.0	14.1	25	9.6	27.3	22.6	18.6	10	-30	150	82	100	22350.0256
10	110	12.0	14.1	25	9.6	27.3	22.6	18.6	10	-30	150	87	100	22350.0257
10	120	12.0	14.1	25	9.6	27.3	22.6	18.6	10	-30	150	93	100	22350.0258
12	20	14.5	17.7	35	10.6	33.2	27.3	22.3	12	-30	150	65	144	22350.0264
12	25	14.5	17.7	35	10.6	33.2	27.3	22.3	12	-30	150	70	144	22350.0265
12	30	14.5	17.7	35	10.6	33.2	27.3	22.3	12	-30	150	74	144	22350.0266
12	35	14.5	17.7	35	10.6	33.2	27.3	22.3	12	-30	150	78	144	22350.0267
12	40	14.5	17.7	35	10.6	33.2	27.3	22.3	12	-30	150	83	144	22350.0268
12	45	14.5	17.7	35	10.6	33.2	27.3	22.3	12	-30	150	87	144	22350.0269
12	50	14.5	17.7	35	10.6	33.2	27.3	22.3	12	-30	150	91	144	22350.0270
12	60	14.5	17.7	35	10.6	33.2	27.3	22.3	12	-30	150	99	144	22350.0272
12	70	14.5	17.7	35	10.6	33.2	27.3	22.3	12	-30	150	108	144	22350.0274
12	80	14.5	17.7	35	10.6	33.2	27.3	22.3	12	-30	150	116	144	22350.0276
12	90	14.5	17.7	35	10.6	33.2	27.3	22.3	12	-30	150	125	144	22350.0260
12	100	14.5	17.7	35	10.6	33.2	27.3	22.3	12	-30	150	133	144	22350.0261
12	110	14.5	17.7	35	10.6	33.2	27.3	22.3	12	-30	150	142	144	22350.0262
12	120	14.5	17.7	35	10.6	33.2	27.3	22.3	12	-30	150	150	144	22350.0263
16	30	19.0	23.4	40	14.0	42.2	34.5	28.5	16	-30	150	147	257	22350.0271
16	35	19.0	23.4	40	14.0	42.2	34.5	28.5	16	-30	150	154	257	22350.0273
16	40	19.0	23.4	40	14.0	42.2	34.5	28.5	16	-30	150	162	257	22350.0275
16	45	19.0	23.4	40	14.0	42.2	34.5	28.5	16	-30	150	170	257	22350.0277
16	50	19.0	23.4	40	14.0	42.2	34.5	28.5	16	-30	150	177	257	22350.0278
16	60	19.0	23.4	40	14.0	42.2	34.5	28.5	16	-30	150	193	257	22350.0279
16	70	19.0	23.4	40	14.0	42.2	34.5	28.5	16	-30	150	208	257	22350.0280
16	80	19.0	23.4	40	14.0	42.2	34.5	28.5	16	-30	150	223	257	22350.0281
16	90	19.0	23.4	40	14.0	42.2	34.5	28.5	16	-30	150	238	257	22350.0282
16	100	19.0	23.4	40	14.0	42.2	34.5	28.5	16	-30	150	253	257	22350.0283

[1] Shearing resistance similar to DIN 50141

chanhvinh.com

Dimensions									Location hole H11	min.	max.		Shearing resistance, two-shear[1] min.	Art. No.
d_1 -0.04 -0.08	l_1 +0.6	d_2	d_3	d_4	l_2 ±1	l_3	l_4	l_5						
[mm]									[mm]	[°C]		[g]	[kN]	
16	**110**	19.0	23.4	40	14.0	42.2	34.5	28.5	16	-30	150	268	257	22350.0284
16	**120**	19.0	23.4	40	14.0	42.2	34.5	28.5	16	-30	150	283	257	22350.0285
16	**130**	19.0	23.4	40	14.0	42.2	34.5	28.5	16	-30	150	298	257	22350.0286
16	**140**	19.0	23.4	40	14.0	42.2	34.5	28.5	16	-30	150	313	257	22350.0287
16	**150**	19.0	23.4	40	14.0	42.2	34.5	28.5	16	-30	150	335	257	22350.0288
20	**50**	24.8	23.4	40	17.0	43.1	34.5	28.5	20	-30	150	241	403	22350.0289
20	**60**	24.8	23.4	40	17.0	43.1	34.5	28.5	20	-30	150	266	403	22350.0290
20	**70**	24.8	23.4	40	17.0	43.1	34.5	28.5	20	-30	150	285	403	22350.0291
20	**80**	24.8	23.4	40	17.0	43.1	34.5	28.5	20	-30	150	313	403	22350.0292
20	**90**	24.8	23.4	40	17.0	43.1	34.5	28.5	20	-30	150	336	403	22350.0293
20	**100**	24.8	23.4	40	17.0	43.1	34.5	28.5	20	-30	150	357	403	22350.0294
20	**110**	24.8	23.4	40	17.0	43.1	34.5	28.5	20	-30	150	380	403	22350.0295
20	**120**	24.8	23.4	40	17.0	43.1	34.5	28.5	20	-30	150	408	403	22350.0296
20	**130**	24.8	23.4	40	17.0	43.1	34.5	28.5	20	-30	150	428	403	22350.0297
20	**140**	24.8	23.4	40	17.0	43.1	34.5	28.5	20	-30	150	452	403	22350.0298
20	**150**	24.8	23.4	40	17.0	43.1	34.5	28.5	20	-30	150	475	403	22350.0299
25	**50**	31.0	30.4	50	22.0	54.8	43.5	36.5	25	-30	150	432	631	22350.0300
25	**60**	31.0	30.4	50	22.0	54.8	43.5	36.5	25	-30	150	469	631	22350.0301
25	**70**	31.0	30.4	50	22.0	54.8	43.5	36.5	25	-30	150	506	631	22350.0302
25	**80**	31.0	30.4	50	22.0	54.8	43.5	36.5	25	-30	150	543	631	22350.0303
25	**90**	31.0	30.4	50	22.0	54.8	43.5	36.5	25	-30	150	580	631	22350.0304
25	**100**	31.0	30.4	50	22.0	54.8	43.5	36.5	25	-30	150	625	631	22350.0305
25	**110**	31.0	30.4	50	22.0	54.8	43.5	36.5	25	-30	150	655	631	22350.0306
25	**120**	31.0	30.4	50	22.0	54.8	43.5	36.5	25	-30	150	692	631	22350.0307
25	**130**	31.0	30.4	50	22.0	54.8	43.5	36.5	25	-30	150	728	631	22350.0308
25	**140**	31.0	30.4	50	22.0	54.8	43.5	36.5	25	-30	150	765	631	22350.0309
25	**150**	31.0	30.4	50	22.0	54.8	43.5	36.5	25	-30	150	803	631	22350.0310

[1] Shearing resistance similar to DIN 50141

chanhvinh.com

Application example

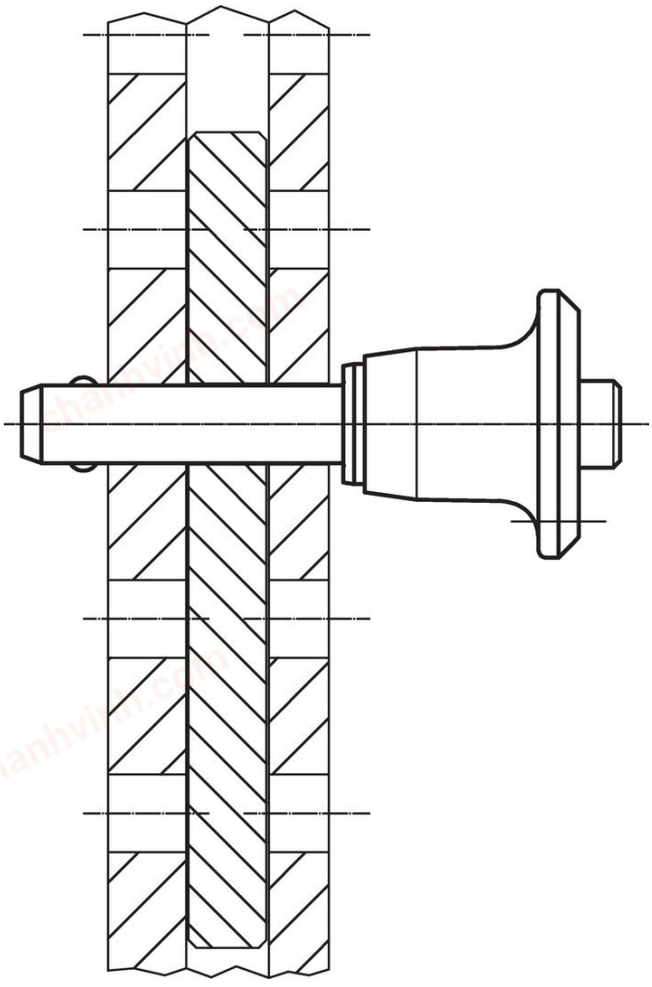

Compliance

For detailed compliance information please select the desired article number.

chanhvinh.com