chanhvinh.com

Multiadapter and Combi Socket · Ø6 mm

EH 22330.

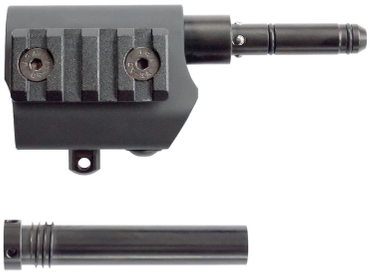

Product Description

A bipod and other components* such as action cameras and/or IR illuminators can be attached to the multiadapter. The multiadapter is attached to the front shaft via the 9.5 mm locking pin which is inserted in the combi socket. The combi socket is compatible with the PUSH & GO products in the sizes 9.5 mm and 6.0 mm. Up to three Picatinny rails can be mounted on the multiadapter. There are two PUSH & GO sockets on the underside, either 9.5 mm or 6.0 mm in size. The rear one is for attaching a sling swivel. The front one can be used instead of a Picatinny rail to mount the stud adapter,e.g. for mounting a bipod. The use of aluminium and titanium makes the multiadapter and combi socket very lightweight.
*The valid legal regulations must be observed.
Be sure to observe the minimum distance to the barrel specified in the assembly instructions!

Material

Press bolt
- Stainless steel A2

Bushing
- Stainless steel 1.4305, black

Seal
- NBR

Body
- Stainless steel 1.4305

Body
- Aluminium, black anodised

Ball
- Stainless steel

Spring
- Stainless Steel

Pin
- Stainless steel

Assembly

Quick and easi to install by an experienced gunsmith!
Follow the assembly instructions.

More information

Notes

Plug-and-play for Sauer 404 and Sauer 505. The multi adapter is ready for use immediately with no need to install the combi socket.

Further products

- Combi Sockets, for multiadapter

chanhvinh.com

Drawing

Multi-Adapter

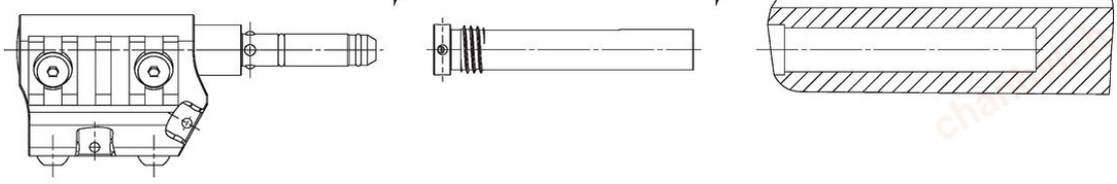

Multi-Adapter

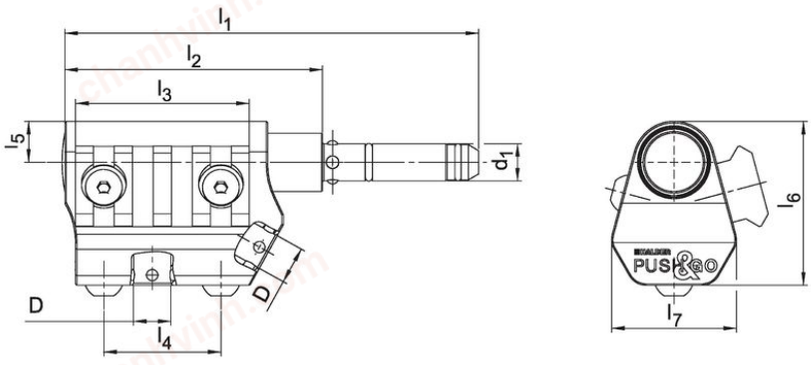

Combi Socket

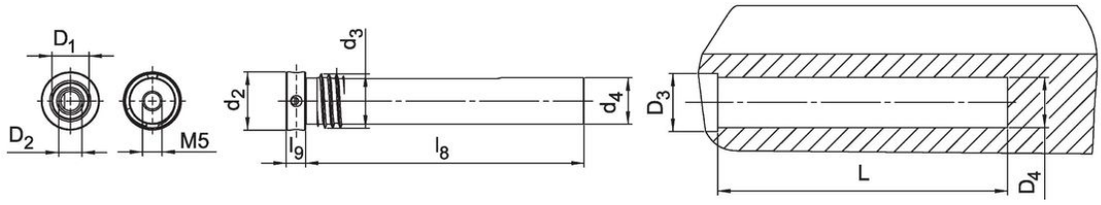

Order information

Nominal diameter	Dimensions													D Ø	Location hole					Art. No.
	d_1	d_2	d_3	d_4	l_1	l_2	l_3	l_4	l_5	l_6	l_7	l_8	l_9		L	Bore Hole D1 Ø	Bore Hole D2 Ø	Bore Hole D3 Ø	Bore Hole D4 Ø	
[mm]	[mm]													[mm]	[mm]					
6	9.5	15	15	12	106	66	45	30	10.5	42	32	72	5	6.1	75	9.6	6.1	15	13	22330.0590

chanhvinh.com

Application example



Compliance

RoHS-compliant
Compliant with Directive 2011/65/EU [RoHS].

Does not contain SVHC substances
No SVHC substances with more than 0.1% w/w contained - SVHC list [REACH] as of 04.02.2026.

SCIP-code
N/A

Does not contain Proposition 65 substances
No Proposition 65 substances included.
https://www.P65Warnings.ca.gov/

Free from Conflict Minerals
This product does not contain any substances designated as "conflict minerals" such as tantalum, tin, gold or tungsten from the Democratic Republic of Congo or adjacent countries.

POP-compliant
Contains no persistent organic pollutants – Stockholm Convention [POP] as of September 2025.

PFAS-compliant
Contains no per- and polyfluoroalkyl substances (PFAS).

TSCA-compliant
Agent concentration in this product does not exceed the specified threshold.