chanhvinh.com

Door Catches

EH 22260.



Product Description

Material

- Sintered steel

Assembly

Not suitable for fastening by welded connection. Secure by using pins.

Drawing

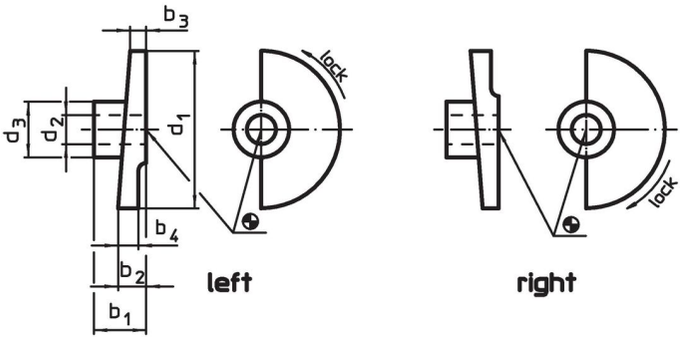

Order information

d_1	d_2 H8	d_3	Dimensions b_1	b_2	b_3	b_4	[g]	Art. No.
			[mm]					
locking by turning to the right								
35	**8**	18	15	7	3	7.0	33	22260.0008
35	**10**	18	15	7	3	7.0	31	22260.0010
65	**12**	23	20	10	5	7.2	103	22260.0012
80	**16**	27	24	12	6	8.8	174	22260.0016
locking by turning to the left								
35	**8**	18	15	7	3	7.0	34	22260.0108
35	**10**	18	15	7	3	7.0	31	22260.0110
65	**12**	23	20	10	5	7.2	103	22260.0112
80	**16**	27	24	12	6	8.8	175	22260.0116

Application example

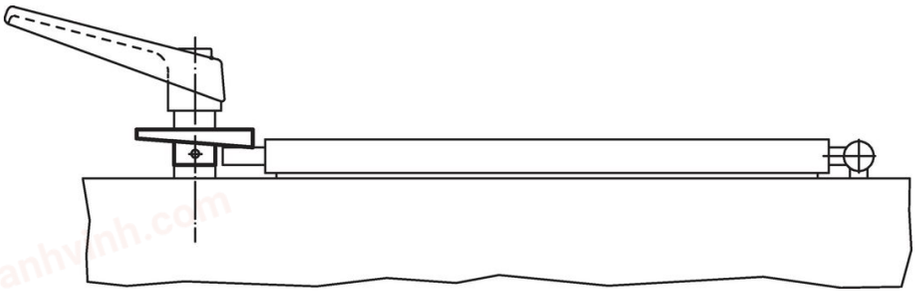

chanhvinh.com

Compliance

RoHS-compliant
Compliant with Directive 2011/65/EU [RoHS].

Does not contain SVHC substances
No SVHC substances with more than 0.1% w/w contained - SVHC list [REACH] as of 04.02.2026.

SCIP-code
N/A

Does not contain Proposition 65 substances
No Proposition 65 substances included.
https://www.P65Warnings.ca.gov/

Free from Conflict Minerals
This product does not contain any substances designated as "conflict minerals" such as tantalum, tin, gold or tungsten from the Democratic Republic of Congo or adjacent countries.

POP-compliant
Contains no persistent organic pollutants – Stockholm Convention [POP] as of September 2025.

PFAS-compliant
Contains no per- and polyfluoroalkyl substances (PFAS).

TSCA-compliant
Agent concentration in this product does not exceed the specified threshold.