chanhvinh.com

Lateral Spring Plungers • with spring steel sheet
EH 22160.



Product Description

The lateral spring plunger with spring steel sheet guarantees a simple and secure positioning of workpieces or components at stops or fixture plates, e.g. in board mounting or before the clamping process in the jig and fixture construction.
The double-sided version allows for serial clamping.
Below h_1 is resulting a down hold effect.

Material

Spring element
- Stainless steel

Body
- Steel, black

Drawing

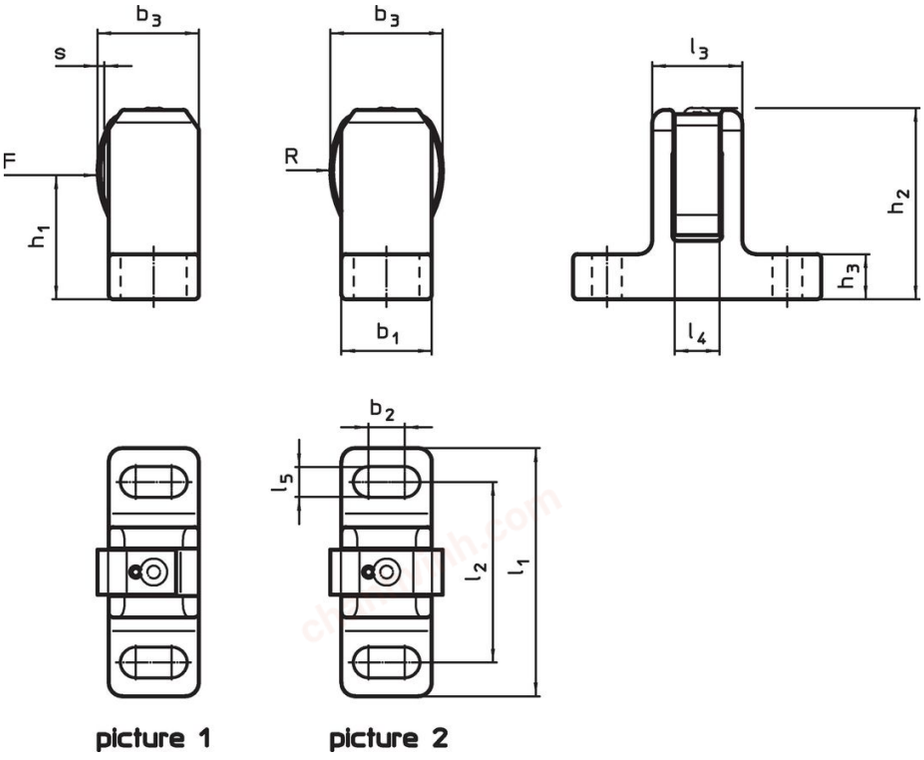

picture 1 picture 2

Order information

Dimensions												Stroke s	For screw	Spring load F max. [1] ~	max.		Art. No.
l_1 ±1	l_2	l_3	l_4	l_5	b_1 ±0.5	b_2	b_3 ~	h_1	h_2 ±1	h_3	R						
[mm]												[mm]	[mm]	[N]	[°C]	[g]	
one-sided – picture 1																	
55	40	20	10	6.6	20	8	22.5	28.5	43.0	10	22.5	1.5	M 6	55	250	128	22160.0006
72	50	23	12	13.5	25	6	29.0	40.5	61.5	15	32.8	1.5	M12	170	250	250	22160.0012
double-sided – picture 2																	
55	40	20	10	6.6	20	8	25.0	28.5	42.5	10	22.5	1.5	M 6	55	250	129	22160.0206
72	50	23	12	13.5	25	6	33.5	40.5	61.5	15	32.8	1.5	M12	170	250	256	22160.0212

[1] statistical average value

chanhvinh.com

Application example

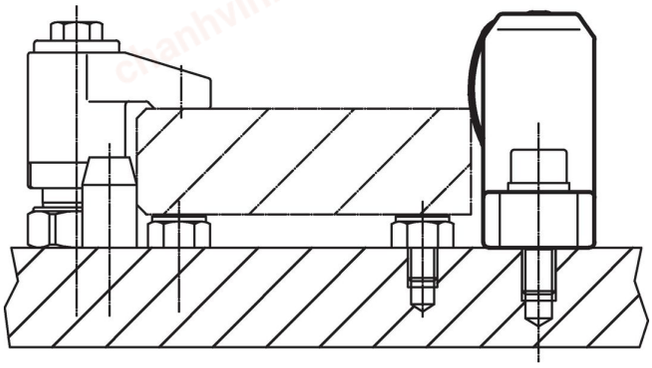

Compliance

RoHS-compliant
Compliant with Directive 2011/65/EU [RoHS].

Does not contain SVHC substances
No SVHC substances with more than 0.1% w/w contained - SVHC list [REACH] as of 04.02.2026.

SCIP-code
N/A

Does not contain Proposition 65 substances
No Proposition 65 substances included.
https://www.P65Warnings.ca.gov/

Free from Conflict Minerals
This product does not contain any substances designated as "conflict minerals" such as tantalum, tin, gold or tungsten from the Democratic Republic of Congo or adjacent countries.

POP-compliant
Contains no persistent organic pollutants – Stockholm Convention [POP] as of September 2025.

PFAS-compliant
Contains no per- and polyfluoroalkyl substances (PFAS).

TSCA-compliant
Agent concentration in this product does not exceed the specified threshold.