chanhvinh.com

Lateral Plungers • with thread, with seal, with female thread
EH 22150.



Product Description

To be used for positioning and applying pressure, e.g. during painting and sandblasting.
Sealed against chips and dirt.

Material

Seal
- CR

Body
- Steel, zinc-plated

Threaded washer
- Steel, blackened

Spring
- Stainless steel
- Steel, blackened
- Steel, zinc-plated by galvanization

Assembly

Formula for calculating the center distance for the mounting hole:
l_0 = z/2 + w + x,
l_0 = center distance,
y = workpiece height,
w = workpiece length,
x = stroke,
z = stop diameter
Calculation dimension x for workpieces:
$x = d_2/2 - s$
Lateral plungers are installed by screwing in by means of a mounting tool.

Characteristic

Version light spring load = spring from stainless steel
Version standard spring load = spring from steel, blackened
Version heavy spring load = spring from steel, zinc-plated by galvanization

More information

Notes

Individual set screws can be screwed in the plate with threaded hole.

Drawing

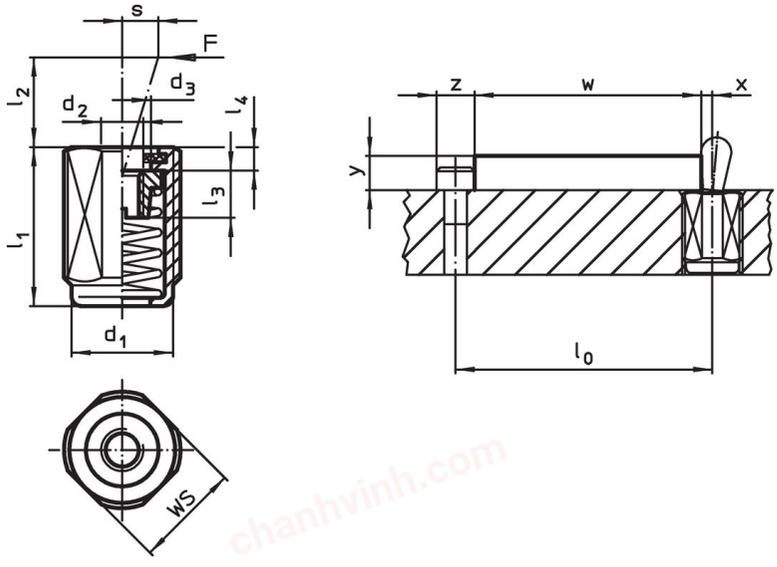

chanhvinh.com

Order information

Dimensions d_1 [mm]	l_1 -2	Spring load F max. [1] ~ [N]	Dimensions d_2	d_3	l_2	l_3	l_4 [mm]	Stroke s [mm]	WS [mm]	max. [°C]	[g]	Art. No.
Light spring load												
M12	**11.5**	**20**	M4	6.1	6	4.5	2.0	0.8	10	110	3.0	22150.1410
M12	**19.0**	**20**	M4	6.1	6	4.5	2.0	0.8	10	110	4.9	22150.1414
M12	**26.5**	**20**	M4	6.1	6	4.5	2.0	0.8	10	110	6.7	22150.1418
M12	**11.5**	**40**	M4	6.1	10	4.5	2.0	1.0	10	110	3.1	22150.1430
M12	**19.0**	**40**	M4	6.1	10	4.5	2.0	1.0	10	110	5.1	22150.1434
M12	**26.5**	**40**	M4	6.1	10	4.5	2.0	1.0	10	110	6.8	22150.1438
M18 x 1,5	**18.0**	**100**	M6	10.1	16	7.5	2.3	1.6	16	110	15.0	22150.1450
M18 x 1,5	**31.5**	**100**	M6	10.1	16	7.5	2.3	1.6	16	110	23.0	22150.1454
M18 x 1,5	**45.0**	**100**	M6	10.1	16	7.5	2.3	1.6	16	110	32.0	22150.1458
Standard spring load												
M12	**11.5**	**50**	M4	6.1	6	4.5	2.0	0.8	10	110	3.3	22150.1411
M12	**19.0**	**50**	M4	6.1	6	4.5	2.0	0.8	10	110	5.4	22150.1415
M12	**26.5**	**50**	M4	6.1	6	4.5	2.0	0.8	10	110	7.3	22150.1419
M12	**11.5**	**75**	M4	6.1	10	4.5	2.0	1.0	10	110	3.3	22150.1431
M12	**19.0**	**75**	M4	6.1	10	4.5	2.0	1.0	10	110	5.5	22150.1435
M12	**26.5**	**75**	M4	6.1	10	4.5	2.0	1.0	10	110	7.4	22150.1439
M18 x 1,5	**18.0**	**150**	M6	10.1	16	7.5	2.3	1.6	16	110	14.0	22150.1451
M18 x 1,5	**31.5**	**150**	M6	10.1	16	7.5	2.3	1.6	16	110	23.0	22150.1455
M18 x 1,5	**45.0**	**150**	M6	10.1	16	7.5	2.3	1.6	16	110	32.0	22150.1459
Heavy spring load												
M12	**11.5**	**100**	M4	6.1	6	4.5	2.0	0.8	10	110	3.5	22150.1412
M12	**19.0**	**100**	M4	6.1	6	4.5	2.0	0.8	10	110	5.8	22150.1416
M12	**26.5**	**100**	M4	6.1	6	4.5	2.0	0.8	10	110	8.0	22150.1420
M12	**11.5**	**100**	M4	6.1	10	4.5	2.0	1.0	10	110	3.5	22150.1432
M12	**19.0**	**100**	M4	6.1	10	4.5	2.0	1.0	10	110	6.2	22150.1436
M12	**26.5**	**100**	M4	6.1	10	4.5	2.0	1.0	10	110	8.6	22150.1440
M18 x 1,5	**18.0**	**200**	M6	10.1	16	7.5	2.3	1.6	16	110	15.0	22150.1452
M18 x 1,5	**31.5**	**200**	M6	10.1	16	7.5	2.3	1.6	16	110	23.0	22150.1456
M18 x 1,5	**45.0**	**200**	M6	10.1	16	7.5	2.3	1.6	16	110	32.0	22150.1460

[1] statistical average value

Accessories

	Dimensions d_1 [mm]	[g]	Art. No.
assembly tool			
	**M12**	76	22150.0820
	M18 x 1,5	137	22150.0822

Application example

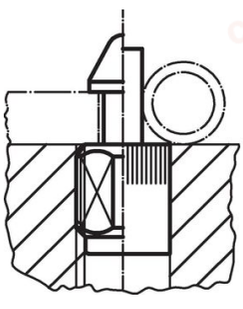

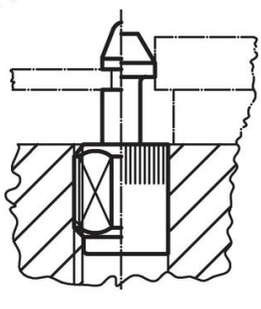

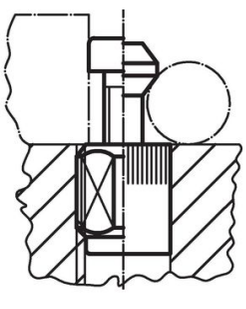

Compliance

For detailed compliance information please select the desired article number.