chanhvinh.com

Lateral Plungers • smooth, with seal, with female thread
EH 22150.



Product Description

To be used for positioning and applying pressure, e.g. during painting and sandblasting.
Sealed against chips and dirt.

Material

Seal
- CR

Body
- Aluminium Al

Threaded washer
- Steel, blackened

Spring
- Stainless steel
- Steel, blackened
- Steel, zinc-plated by galvanization

Assembly

Formula for calculating the center distance for the mounting hole:
l_0 = z/2 + w + x,
l_0 = center distance,
y = workpiece height,
w = workpiece length,
x = stroke,
z = stop diameter
Calculation dimension x for workpieces:
$x = d_2/2 - s$
Installation by pressing in.

Characteristic

Version light spring load = spring from stainless steel
Version standard spring load = spring from steel, blackened
Version heavy spring load = spring from steel, zinc-plated by galvanization

More information

Notes

Individual set screws can be screwed in the plate with threaded hole.

Further products

- Eccentric Mounting Bushings, for lateral plungers, smooth

Drawing

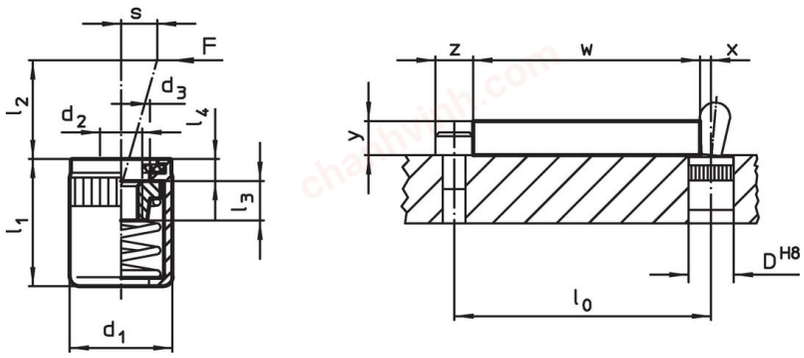

Order information

Dimensions d_1	Dimensions d_2	Spring load F max. [1] ~	Dimensions d_3	Dimensions l_1 -2	Dimensions l_2	Dimensions l_3	Dimensions l_4	Stroke s	Location hole D H8	max.		Art. No.
[mm]		[N]	[mm]					[mm]	[mm]	[°C]	[g]	
Light spring load												
10	**M4**	**20**	6.3	12.0	6	4.5	1.8	0.8	10	110	1.9	22150.1120
10	**M4**	**40**	6.3	12.0	10	4.5	1.8	1.0	10	110	2.0	22150.1125
16	**M6**	**100**	10.2	18.5	16	7.5	2.0	1.6	16	110	9.6	22150.1140

[1] statistical average value

chanhvinh.com

Dimensions d_1 [mm]	Dimensions d_2 [mm]	Spring load F max. 1) ~ [N]	Dimensions d_3 [mm]	Dimensions l_1 -2 [mm]	Dimensions l_2 [mm]	Dimensions l_3 [mm]	Dimensions l_4 [mm]	Stroke s [mm]	Location hole D H8 [mm]	max. [°C]	[g]	Art. No.
Standard spring load												
10	**M4**	**50**	6.3	12.0	6	4.5	1.8	0.8	10	110	2.2	22150.1121
10	**M4**	**75**	6.3	12.0	10	4.5	1.8	1.0	10	110	7.6	22150.1126
16	**M6**	**150**	10.2	18.5	16	7.5	2.0	1.6	16	110	9.5	22150.1141
Heavy spring load												
10	**M4**	**100**	6.3	12.0	6	4.5	1.8	0.8	10	110	2.3	22150.1122
10	**M4**	**100**	6.3	12.0	10	4.5	1.8	1.0	10	110	2.5	22150.1127
16	**M6**	**200**	10.2	18.5	16	7.5	2.0	1.6	16	110	10.0	22150.1142

1) statistical average value

Accessories

	Dimensions d_1 [mm]	[g]	Art. No.
assembly tool			
	**10**	49	22150.0831
	16	105	22150.0833

Compliance

For detailed compliance information please select the desired article number.